ICOM

SERVICE MANUAL

UHF TRANSCEIVERS

IC-F4061T
IC-F4062T
IC-F4063T
IC-F4061S
IC-F4062S
IC-F4063S

S-14229HZ-C1
Apr. 2006

Icom Inc.

INTRODUCTION

This service manual describes the latest service information for the **IC-F4061T/S, IC-F4062T/S and IC-F4063T/S** UHF TRANSCEIVERS at the time of publication.

MODEL	Version	Symbol	Frequency	Key Pad
IC-F4061T	U.S.A	[USA-01]	400–470 MHz	10-key
		[USA-02]	450–520 MHz	
IC-F4061S		[USA-01]	400–470 MHz	4-key
		[USA-02]	450–520 MHz	
IC-F4062T	EURO	[EUR-01]	400–470 MHz	10-key
IC-F4062S				4-key
IC-F4063T	GENERAL	[GEN-01]	400–470 MHz	10-key
		[GEN-02]	450–520 MHz	
IC-F4063S		[GEN-01]	400–470 MHz	4-key
		[GEN-02]	450–520 MHz	

To upgrade quality, all electrical or mechanical parts and internal circuits are subject to change without notice or obligation.

CAUTION

NEVER connect the transceiver to an AC outlet or to a DC power supply that uses more than 7.2 V. Such a connection could cause a fire or electric hazard.

DO NOT expose the transceiver to rain, snow or any liquids.

DO NOT reverse the polarities of the power supply when connecting the transceiver.

DO NOT apply an RF signal of more than 20 dBm (100 mW) to the antenna connector. This could damage the transceiver's front end.

ORDERING PARTS

Be sure to include the following four points when ordering replacement parts:

1. 10-digit Icom parts number
2. Component name and informations
3. Equipment model name and unit name
4. Quantity required

<**SAMPLE ORDER**>

5030002830 LCD	M4-0078TAY-2	IC-F4061S	Front unit	5 pieces
8810009220 Screw	PH B0 M2×8 ZK (BT)	IC-F4061S	Chassis	10 pieces

Addresses are provided on the inside back cover for your convenience.

REPAIR NOTES

1. Make sure the problem is internal before disassembling the transceiver.
2. **DO NOT** open the transceiver until the transceiver is disconnected from its power source.
3. **DO NOT** force any of the variable components. Turn them slowly and smoothly.
4. **DO NOT** short any circuits or electronic parts. An insulated turning tool **MUST** be used for all adjustments.
5. **DO NOT** keep power ON for a long time when the transceiver is defective.
6. **DO NOT** transmit power into a signal generator or a sweep generator.
7. **ALWAYS** connect a 30 dB to 40 dB attenuator between the transceiver and a deviation meter or spectrum analyzer when using such test equipment.
8. **READ** the instructions of test equipment thoroughly before connecting equipment to the transceiver.

Icom, Icom Inc. and ICOM logo are registered trademarks of Icom Incorporated (Japan) in the United States, the United Kingdom, Germany, France, Spain, Russia and/or other countries.

TABLE OF CONTENTS

SECTION 1 SPECIFICATIONS

SECTION 2 INSIDE VIEWS

SECTION 3 DISASSEMBLY INSTRUCTIONS

SECTION 4 OPTIONAL UNIT INSTALLATION

SECTION 5 CIRCUIT DESCRIPITON

5-1 RECEIVER CIRCUITS 5-1
5-2 TRANSMITTER CIRCUITS 5-2
5-3 PLL CIRCUITS 5-3
5-4 POWER SUPPLY CIRCUITS 5-4
5-5 PORT ALLOCATIONS 5-5

SECTION 6 ADJUSTMENT PROCEDURES

6-1 PREPARATION 6-1
6-2 FREQUENCY ADJUSTMENT 6-4
6-3 TRANSMIT ADJUSTMENT 6-5
6-4 RECEIVE ADJUSTMENT 6-6

SECTION 7 PARTS LIST

SECTION 8 MECHANICAL PARTS AND DISASSEMBLY

SECTION 9 SEMICONDUCTOR INFORMATION

SECTION 10 BOARD LAYOUTS

10-1 FRONT UNIT 10-1
10-2 MAIN UNIT 10-1
10-3 RF UNIT 10-1
10-4 JACK UNIT 10-1
10-5 VR UNIT 10-1
10-6 BC-160 10-1

SECTION 11 BLOCK DIAGRAM

SECTION 12 VOLTAGE DIAGRAM

SECTION 13 BC-160

SECTION 1 SPECIFICATIONS

				[USA], [GEN]	[EUR]
GENERAL	• Frequency coverage			400–470 MHz [USA-01], [GEN-01] 450–520 MHz [USA-02], [GEN-02]	400–470 MHz [EUR-01]
	• Type of emission		Wide	16K0F3E (25.0 kHz/30.0 kHz)	16K0F3E (25.0 kHz)
			Middle	–	14K0F3E (20.0 kHz)
			Narrow	11K0F3E, 11K0F7E/D* (15.0 kHz) 8K50F3E, 8K10F1E/D* (12.5 kHz) 4K00F1E/D* (6.25 kHz)	8K50F3E (12.5 kHz) 4K00F1E/D* (6.25 kHz)
	• Number of programable channels			512 channels (128 zones)	
	• Antenna impedance			50 Ω (nominal)	
	• Operating temperature range			–22˚F to +140˚F	–25˚C to +55˚C
	• Power supply requirement			Specified Icom's battery packs only (Operatable voltage; 7.2 V DC negative ground)	
	• Current drain (approx.)	RX	Stand-by	95 mA	
			Max.audio	600 mA	
		TX	at 5 W	1.8 A	
			at 1 W	0.7 A	
	• Dimensions (projections not included)			2 3/32 (W) × 5 11/32 (H) × 1 17/32 (D) in	53.0 (W) × 136.0 (H) × 38.5 (D) mm
	• Weight (with BP-232, approx.)			12 oz	340 g
TRANSMITTER	• Transmit output power			5 W (High), 2 W (Low2), 1 W (Low1)	
	• Modulation			Variable reactance frequency modulation	
	• Max. frequency deviation		Wide	±5.0 kHz	
			Middle	–	±4.0 kHz
			Narrow	±2.5 kHz	
	• Frequency error			±1.0 ppm	±1.5 kHz
	• Spurious emission			75 dB typ.	0.25 μW (≤1 GHz), 1.00 μW (>1 GHz)
	• Adjacent channel power		Wide	More than 70 dB (80 dB typ.)	
			Middle	–	More than 70 dB (80 dB typ.)
			Narrow	More than 60 dB (70 dB typ.)	
	• Audio harmonic distortion			3% typ. (with 1 kHz AF 40% deviation)	
	• FM hum and noise (without CCITT filter)		Wide	More than 40 dB (46 dB typ.)	–
			Narrow	More than 34 dB (40 dB typ.)	–
	• Limiting charact of modulation			60–100% of max. deviation	
	• Microphone impedance			2.2 kΩ	
RECEIVER	• Receive system			Double conversion superheterodyne	
	• Intermediate frequencies			1st IF; 46.35 MHz, 2nd IF; 450 kHz	
	• Sensitivity			0.25 μV typ. at 12 dB SINAD	–4 dBμV (EMF) typ. at 20 dB SINAD
	• Squelch sensitivity (at threshold)			0.25 μV typ.	
	• Adjacent channel selectivity		Wide	More than 70 dB (75 dB typ.)	
			Middle	–	More than 70 dB (75 dB typ.)
			Narrow	More than 65 dB (68 dB typ.)	
	• Spurious response			More than 70 dB (80 dB typ.)	
	• Intermodulation			More than 70 dB (74 dB typ.)	More than 65 dB (67 dB typ.)
	• Hum and Noise (without CCITT filter)		Wide	More than 40 dB (46 dB typ.)	–
			Narrow	More than 34 dB (40 dB typ.)	–
	• Residual modulation (with CCITT filter)		Wide	–	More than 45 dB (55 dB typ.)
			Middle	–	More than 43 dB (53 dB typ.)
			Narrow	–	More than 40 dB (50 dB typ.)
	• Audio output power			0.5 W typ. at 5% distortion with an 8 Ω load	
	• Audio output impedance			8 Ω	

Measurements made in accordance with EIA-152-C/204D, TIA-603 ([USA], [GEN]) or EN 300 086 ([EUR]).

All stated specifications are subject to change without notice or obligation.

*; Optional UT-119S/H is required for the digital mode operation.

SECTION 2 INSIDE VIEWS

• FRONT UNIT

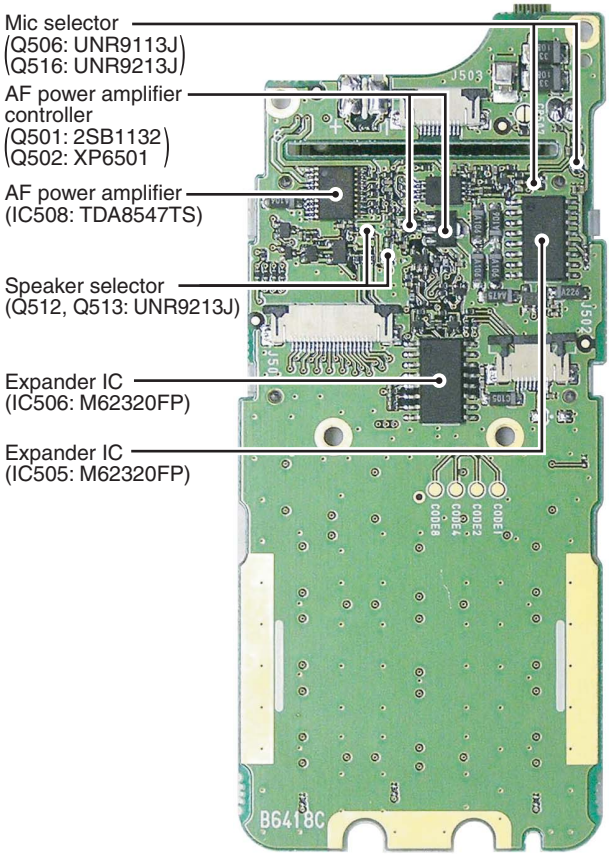

• RF UNIT (TOP VIEW)

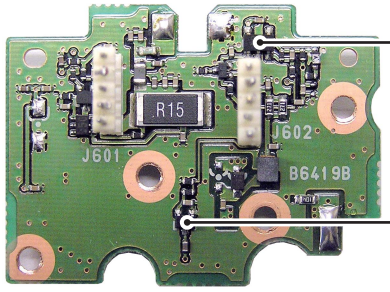

• RF UNIT (BOTTOM VIEW)

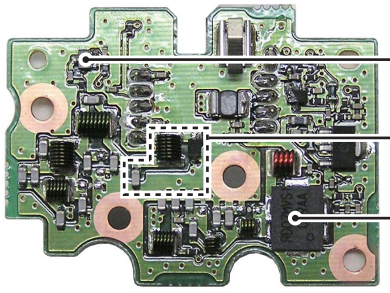

• MAIN UNIT (TOP VIEW)

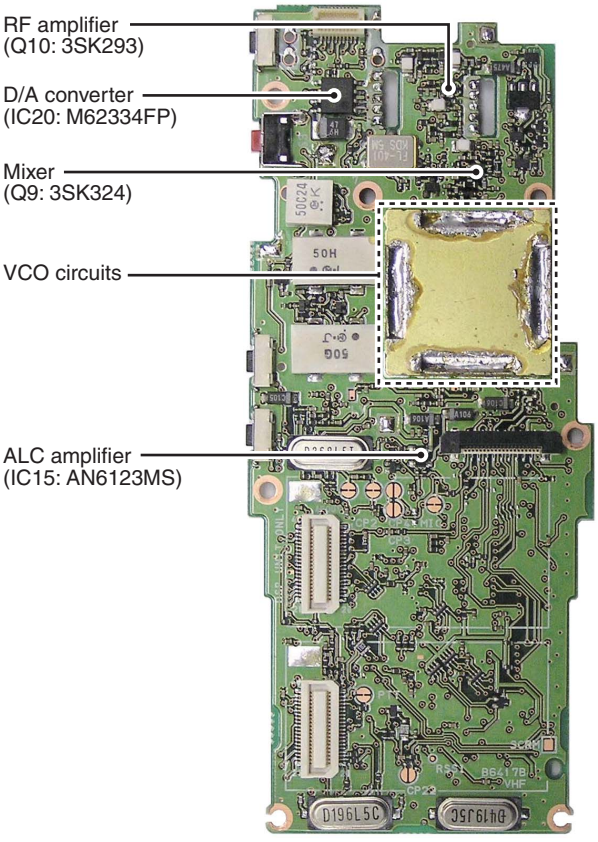

• MAIN UNIT (BOTTOM VIEW)

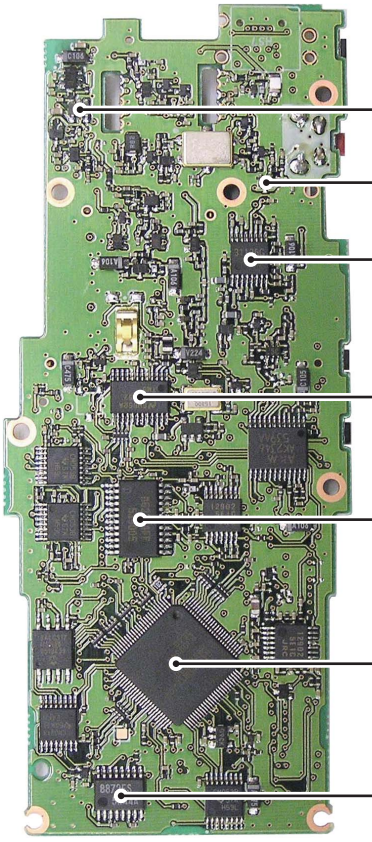

SECTION 3 DISASSEMBLY INSTRUCTIONS

• REMOVING THE CHASSIS UNIT

① Unscrew 1 nut Ⓐ, and remove 2 knobs Ⓑ and Ⓒ.
② Unscrew 2 screws Ⓓ.
③ Take off the chassis unit in the direction of the arrow.
④ Disconnect the flat cable Ⓔ form J501.
⑤ Remove the seal Ⓕ.
⑥ Unscrew 2 nuts Ⓖ and remove the plate Ⓗ.

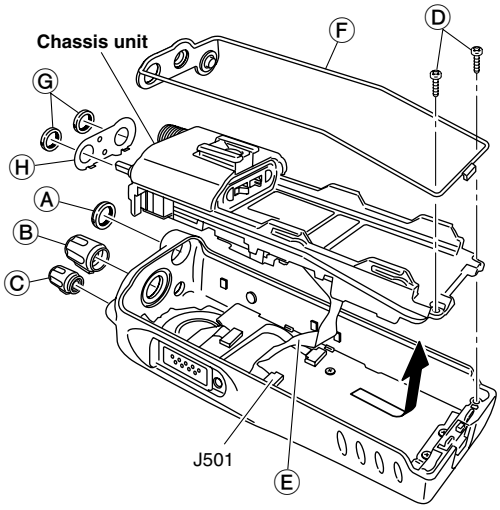

• REMOVING THE RF UNIT

① Unsolder 3 points Ⓐ.
② Unscrew 4 screws Ⓑ and remove the RF unit from the chassis.

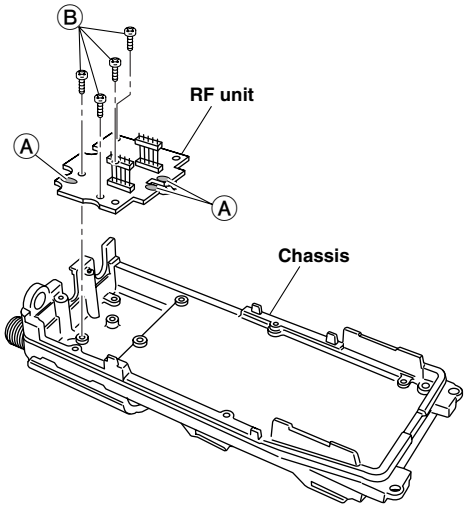

• REMOVING THE MAIN UNIT

① Unsolder 1 point Ⓐ.
② Unscrew 1 screw Ⓑ and remove the VR unit.
③ Unsolder 5 points Ⓒ and remove the shield plate Ⓓ.
④ Unsolder 10 points Ⓔ.
⑤ Unscrew 7 screws Ⓕ and remove the MAIN unit from the chassis.

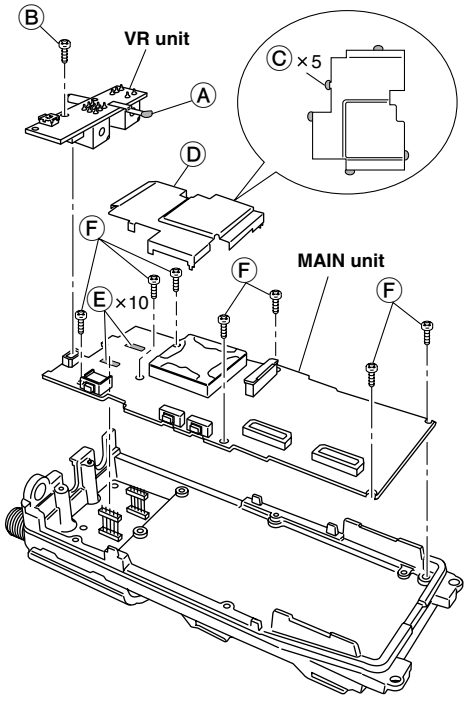

• REMOVING THE FRONT UNIT

① Disconnect the flat cable Ⓐ from J503.
② Unsolder 2 points Ⓑ.
③ Unscrew 6 screws Ⓒ and remove the plate Ⓓ and FRONT unit.

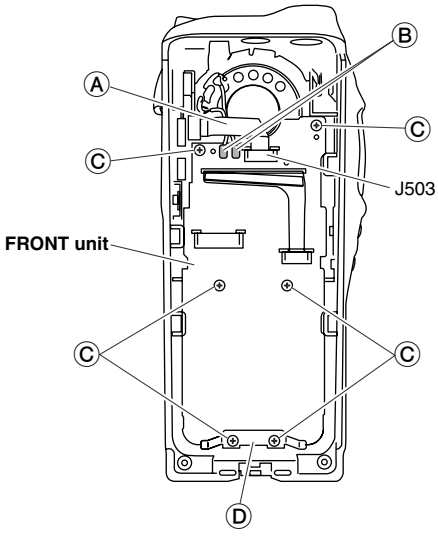

SECTION 4 OPTIONAL UNIT INSTALLATION

CAUTION! Optional unit installation should be done at authorized Icom servise center only.
The waterproof capability of the transceiver cannot be guaranteed if you install an unit yourself, or have it done at a non-authorised dealer/service center.

Install the optional unit as follows.

① Rotate **[VOL]** to turn the power OFF, and remove the battery pack.
② Remove the anntena and antenna nut Ⓐ.
③ Remove the rotary selector Ⓑ and volume control Ⓒ.
④ Unscrew two screws Ⓓ, then take off the chassis from the front panel in the direction of the arrow.
BE CAREFUL! Flat cable is connected between the MAIN unit on the chassis and front panel.

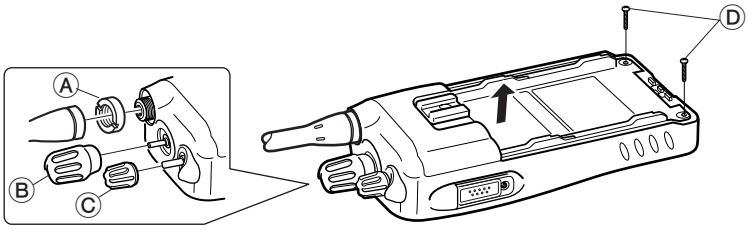

⑤ Install the optional unit as below.

• UT-96R, UT-109R and UT-110R installation*

DO NOT attach the unit to the connector "J2." Otherwise no TX modulation or AF output is available.

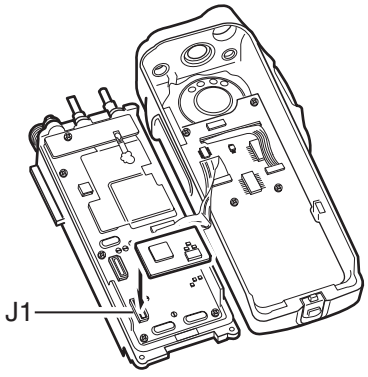

• UT-119S/H installation

DO NOT attach the unit to the connector "J1." Otherwise no TX modulation or AF output is available.

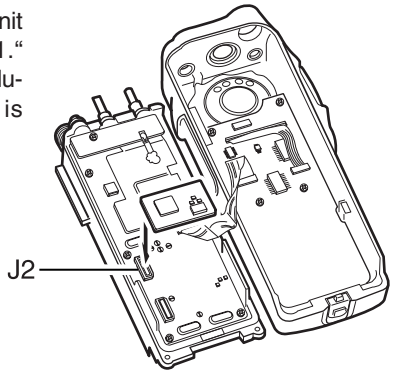

***; The following PC bord modification is required when installing optional UT-109R and UT-110R.**

Cut the pattern on the PC board at "MIC" and "AFOUT" as shown below.

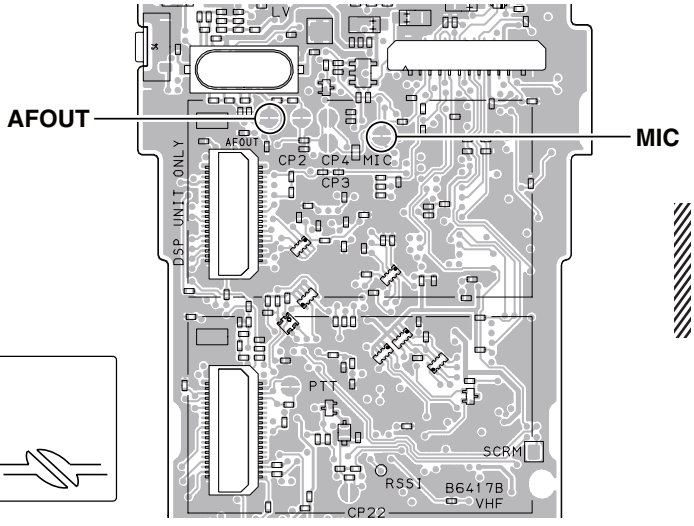

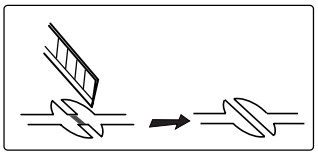

NOTE: When uninstalling the unit
Be sure to re-solder the disconnected points as below when you remove the unit. Otherwise, no TX modulation or AF output is available.

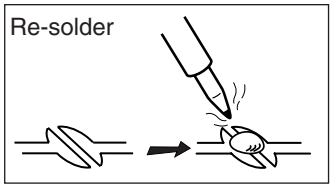

SECTION 5 CIRCUIT DESCRIPTION

5-1 RECEIVER CIRCUITS

5-1-1 ANTENNA SWITCH (MAIN and RF UNITS)

The received signals from the antenna connector are passed through the antenna switch which toggles the receive (RX) line and transmit (TX) line.

The received signals from the antenna connector are passed through the low-pass filter (LPF; L601–L603, C601–C607), and the antenna switch (D601, D602 and D603 are OFF).

While transmitting, the voltage on the T5V line is applied to D601, D602 and D603, and these are ON. Thus the TX line is connected to the antenna. Simultaneously, the RX line is connected to the GND to prevent transmit signal entering.

While receiving, no voltage is applied to the D601, D602 and D603, and these are OFF. Thus the TX line and the antenna is disconnected to prevent received signals entering. Simultaneously, the RX line is disconnected from the GND and the received signals are passed through the LPF (RF UNIT; L604, C610, C611).

The filtered signals from the LPF (RF UNIT; L604, C610, C611) are then applied to the RF circuit via the two staged tunable bandpass filter (BPF; D21–D24, L31, L32, C120–C122, C125–C127).

5-1-2 RF CIRCUIT (MAIN UNIT)

The received signals are filtered and amplified at the RF circuit.

The filtered signals are applied to the RF amplifier (Q10). The amplified signals are applied to the 1st mixer (Q9) via another two-staged BPF (D28, D29, L33, L34, C141–C144, C147, C148).

5-1-3 1st IF CIRCUITS

The received signals are converted into the 1st IF signal, and amplified at the 1st IF circuits.

The filtered signals from the RF circuit are converted into the 46.35 MHz 1st IF signal by being mixed with the 1st Local Oscillator (LO) signals from the VCO at the 1st mixer (Q9).

The LO signals for 435/485 MHz (Low band/High band) and lower frequencies are generated by the RX1 VCO (Q2, D5, D6, D8), and the LO signals for 435/485 MHz (Low band/High band) and higher frequencies are generated by the RX2 VCO (Q1, D1, D2).

The converted 1st IF signal is passed through the 1st IF filter (in wide mode; FI1, in narrow mode; FI4) via the bandwidth switch (D34), to remove adjacent signals. The filtered signal is applied to the 1st IF amplifier (Q25) via another bandwidth switch (D35). The amplified 1st IF signal is then applied to the FM IF IC (IC3, pin 16).

5-1-4 2nd IF AND DEMODULATOR CIRCUITS (MAIN UNIT)

The 1st IF signal is converted into the 2nd IF signal, and demodulated.

The 1st IF signal from the 1st IF amplifier (Q25) is applied to the 2nd IF mixer in the FM IF IC (IC3, pin 16). And the 1st IF signal is converted into the 450 kHz 2nd IF signal by being mixed with the 2nd LO signal from the reference frequency oscillator (X1) via the tripler (Q18).

The converted 2nd IF signal is output from pin 3, and passed through the 2nd IF filter (FI2) to suppress sideband noise. In narrow mode, the 2nd IF signal is also passed through another 2nd IF filter (FI3) via bandwidth switches (D32, D33).

The filtered 2nd IF signal is applied to the limiter amplifier in the FM IF IC (IC3, pin 5). The amplified 2nd IF signal is FM-demodulated at the quadrature detector (X5, IC3, pins 10, 11) and output from pin 9. The demodulated AF signals are then applied to the AF circuits.

5-1-5 AF CIRCUITS (FRONT and MAIN UNITS)

The demodulated AF signals from the FM IF IC are amplified and filtered at AF circuits. This transceiver employs the base band IC for audio signal processing for both transmit and receive. The base band IC is an audio processor and composed of pre-amplifier, compressor, expander, scrambler, etc. in its package.

The demodulated AF signals from the FM IF IC (IC3, pin 9) are applied to the base band IC (IC5, pin 23) via the Digital/Analog switch (IC14, pins 2, 15).

The applied AF signals are amplified at the amplifier (RXA1) and level adjusted at the volume controller (VR3), then suppressed unwanted 3 kHz and higher audio signals at LPF. The filtered AF signals are applied or bypassed the TX/RX HPF, scrambler, de-emphasis sections in sequence.

• 2nd IF AND DEMODULATOR CIRCUITS

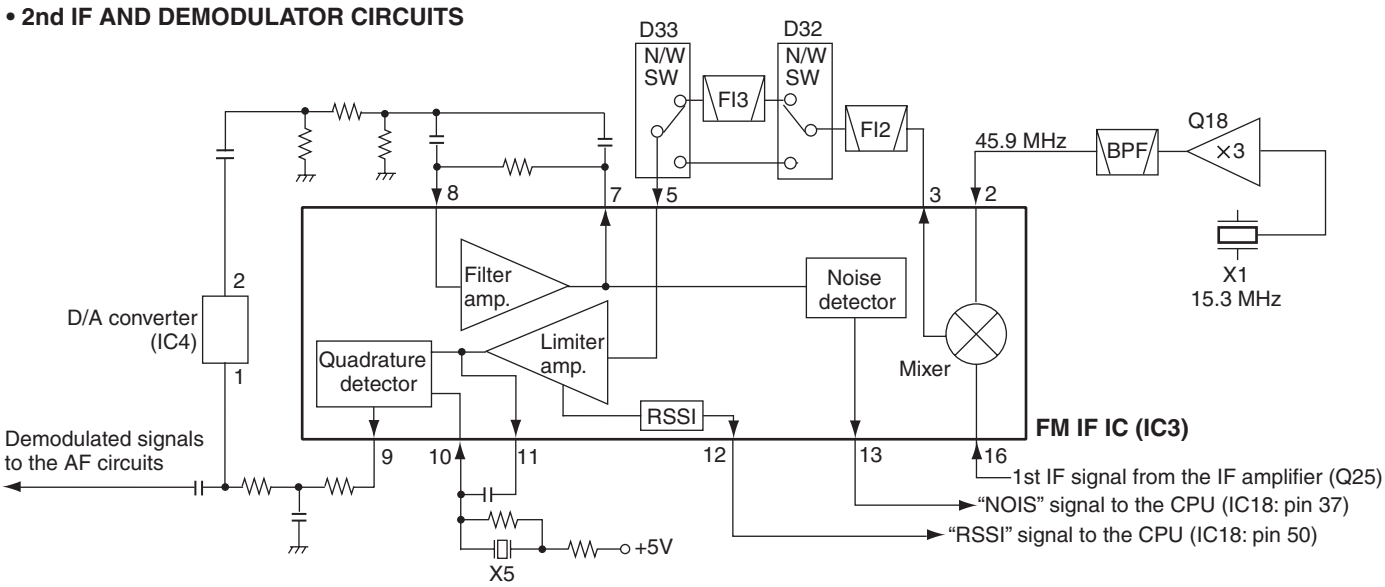

The TX/RX HPF filters out 250 Hz and lower audio signals, and the de-emphasis circuit obtains –6 dB/oct of audio characteristics. The expander expands the compressed audio signals and also noise reduction function is provided.

The AF signals are then level adjusted at the volume controller (VR4) and amplified at the amplifier (RXA2). The amplified AF signals are output from pin 20 and passed through another de-emphasis circuit (IC13, pins 2, 15), and then applied to the D/A converter (IC4, pin 16) for level adjustment via the AF mute switch (IC14, pins 3, 4).

The level-adjusted AF signals are applied to the AF amplifier (FRONT UNIT; IC509, pin 2). The amplified AF signals are output from pin 1, and applied to the AF power amplifier (IC508, pin 17) to obtain 0.5 W (typical) of AF output power. The power-amplified AF signals are output from pin 18, and then applied to the internal speaker.

When an external speaker-microphone or headset is attached to the multi-connector (JACK UNIT; MP801), the AF signals from the AF amplifier (IC509, pin 1) are applied to the AF power amplifier (IC508, pin 14). The power-amplified AF signals are then output from pin 13, and applied to the multi-connector (JACK UNIT; MP801, pin 7).

5-1-5 SQUELCH CIRCUIT

• NOISE SQUELCH

The squelch mutes the AF output signals when no RF signals are received. By detecting noise components (30 kHz and higher signals) in the demodulated AF signals, the squelch circuit toggles the AF power amplifier ON and OFF.

A portion of the demodulated AF signals from the FM IF IC (IC3, pin 9) are applied to the D/A converter (IC4, pin 1) for level adjustment (squelch threshold adjustment). The level-adjusted AF signals are output from pin 2 and passed through the noise filter (IC3, pins 7, 8, R121–R124, C216–C218). The filtered noise signals are amplified the noise components only.

The amplified noise components are converted into the pulse-type signal at the noise detector section, and output from pin 13 as the "NOIS" signal. The signal is applied to the CPU (IC18, pin 37). Then the CPU outputs serial data to the expand IC (FRON UNIT; IC505, pin 3), and the expand IC outputs "AFON" signal from pin 4 according to the "NOIS" signal level, to the AF power amplifier controller (FRONT UNIT; Q501, Q502, D508). The AF power amplifier controller toggles AF power amplifier (FRONT UNIT; IC508, IC509) ON and OFF according to the "AFON" signal.

• TONE SQUELCH

The tone squelch circuit detects tone signals and opens the squelch only when receiving a signal containing a matched subaudible tone. When the tone squelch is in use, and a signal with a mismatched or no subaudible tone is received, the tone squelch circuit mutes the AF signals even when the noise squelch is open.

• CTCSS/DTCS

A portion of the demodulated AF signals are passed through the active LPF (Q28) to filters CTCSS/DTCS signal. The filtered signal is applied to the CPU (IC18, pin 46). The CPU compares the applied signal and the set CTCSS/DTCS, then output the serial data to the expand IC (FRON UNIT; IC505, pin 3), and the expand IC outputs "AFON" signal from pin 4 to the AF power amplifier controller (Q501, Q502, D508).

• 2/5 TONE

2/5 tone signals in the demodulated AF signals are passed through the LPF in the base band IC (IC5) and output from pin 21, then applied to the CPU (IC18, pin 45) and decoded.

• DTMF

DTMF signals in the demodulated AF signals are passed through the LPF in the base band IC (IC5) and output from pin 21, then applied to the DTMF decoder (IC10, pin 1) and decoded.

5-2 TRANSMITTER CIRCUITS

5-2-1 MICROPHONE AMPLIFIER CIRCUITS (MAIN UNIT)

The AF signals from the microphone (MIC signals) are filtered and level-adjusted at microphone amplifier circuits.

MIC signals from the microphone are passed through the microphone switch (FRON UNIT; Q515). The microphone switch selects the AF signals from the internal microphone (FRON UNIT; MC501) or from an external microphone.

MIC signals from the microphone switch (FRON UNIT; Q515) are applied to the microphone amplifier (FRON UNIT; IC509, pin 6), and amplified AF signals are output from pin 7, and passed through the pre-emphasis circuit (IC13, pins 4, 5) to obtain +6 dB/oct of frequency characteristic. The pre-emphasized MIC signals are then applied to the microphone amplifier (IC9, pin 9). And the amplified MIC signals are output from pin 8, and applied to the D/A converter (IC4, pin 9) for level adjustment (=microphone sensitivity adjustment). The level-adjusted MIC signals are output from pin 10, and applied to the ALC (Automatic Level Control) circuit (IC15, pin 3) which limits the amplitude of the MIC signals to prevent over deviation. The amplitude-limited MIC signals are output from pin 5, then applied to the base band IC (IC5, pin 3).

The applied MIC signals are amplified at the amplifier (TXA1), and level adjusted at the volume controller (VR1). The level adjusted MIC signals are applied or bypassed the compressor section, pre-emphasis section, TX/RX HPF, de-scrambler, limiter, splatter, in sequence, then applied to another volume controller.

The compressor compresses the MIC signals to provide high S/N ratio for receive side, and the pre-emphasis obtains +6 dB/oct audio characteristics. The TX/RX HPF filters out 250 Hz and lower audio signals, the limiter limits its level and the splatter filters out 3 kHz and higher audio signals.

The filtered MIC signals are level adjusted at another volume controller (VR2), and then output from pin 7 via smoothing filter (SMF).

• BASE BAND IC BLOCK DIAGRAM

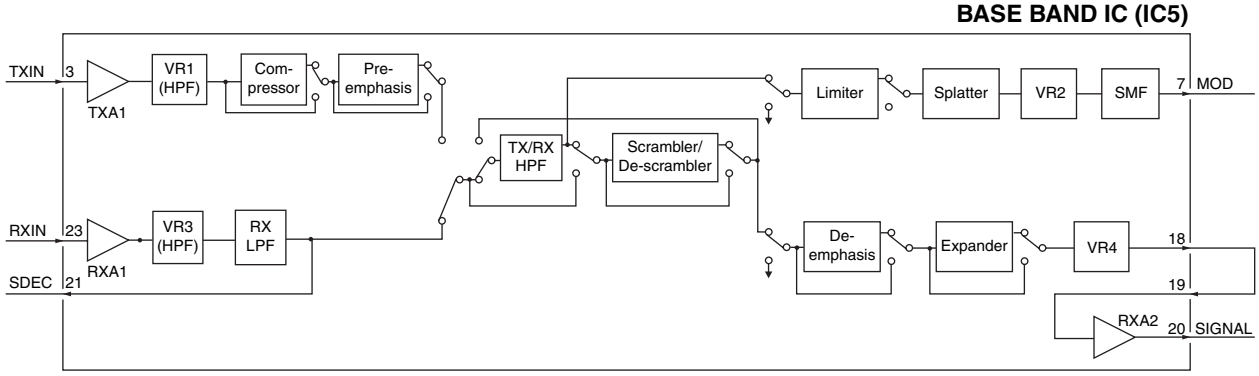

The output AF signals are then passed through the Digital/Analog switch (IC14, pins 12, 14) and applied to the AF mixer (IC9, pin 6) where the MIC signals and Tone signals are mixed with (while CTCSS/DTCS are in use) via the PM/FM switch (IC13, pins 12, 14).

The CTCSS and DTCS signals are generated by the CPU (IC18) and output from pins 89–91. The output signals are passed through the 3 registers (R263–R265) to change its wave form. The wave form changed CTCSS/DTCS signals are passed through the LPF (IC17, pins 1, 3) and the D/A converter (IC4, pins 21, 22) for level adjustment. The level adjusted CTCSS/DTCS signals are then applied to the AF mixer (IC9, pin 6).

2/5 tone and DTMF signals are generated by the CPU (IC18) and output from pin 43. The output signals are passed through two LPF's (IC17, pins 8, 10 and pins 5, 7), then applied to the AF mixer (IC9, pin 6).

The mixed AF signals are output from pin 7 of the AF mixer (IC9) and passed through the D/A converter (IC4, pins 3, 4) for level adjustment (=deviation adjustment), then applied to the modulation circuit (D11) as the modulation signals.

The modulation signals are also applied to the reference frequency oscillator (X1) via D/A converter (IC4, pins 11, 12) and AF amplifier (IC21, pins 1, 4).

5-2-2 MODULATION CIRCUIT (MAIN UNIT)

The modulation signals from the microphone amplifier circuits are applied to the D11, and modulate the VCO oscillating signal by changing the reactance of D11. The modulated VCO output signal is buffer-amplified by Q4 and Q6, then applied to transmit amplifiers as a transmit signal via the TX/RX switch (D14 is ON, D15 is OFF) and buffer amplifier (Q7).

5-2-3 TRANSMIT AMPLIFIERS (RF UNIT)

The transmit signal from the buffer amplifier (MAIN UNIT; Q7) is amplified to the transmit output level by pre-driver (Q603), driver (Q602) and power (Q601) amplifiers.

The power-amplified transmit signal is passed through the two staged LPF (L607, L608, C612, C616, C620, C623, C624) to filter off the harmonic components in the transmit signal. The filtered transmit signal is passed through the antenna switching circuit (D601, D602 and D603 are ON), then applied to the antenna connector (CHASSIS; J1) via another LPF (L601–L603, C601–C607).

5-2-4 APC CIRCUIT (RF UNIT)

The APC (Automatic Power Control) circuit stabilizes transmit output power to prevent the transition of the transmit output power level which is caused by load mismatching or heat effect, etc. The APC circuit also selects transmit output power from high, middle and low power.

A portion of the transmit signal is detected by the transmit power detector (D604, D607) to produce a DC voltage corresponding to the transmit output power level. The detected voltage is applied to the APC amplifier (IC601, pin 3). The transmit power setting voltage "T2" from the D/A converter (MAIN UNIT; IC20, pin 2) is applied to another input terminal (pin 1) as the reference voltage.

The APC amplifier compares the detected voltage and reference voltage, and the difference of the voltage is output from pin 4. The output voltage controls the bias of the pre-drive (Q603), drive (Q602) and power (Q601) amplifiers to reduce/increase the gain of these amplifiers for stable transmit output power.

The change of transmit output power is carried out by the change of reference voltage "T2," and the transmit power muting is carried out by the TX mute switch (Q606), using the "TMUT" signal from the CPU (IC18, pin 13).

5-3 PLL CIRCUITS

5-3-1 VCO (Voltage Controlled Oscillator) CIRCUITS (MAIN UNIT)

A VCO is a oscillator which its oscillating frequency is controlled by adding voltage (lock voltage).

This transceiver has 3 VCO's; RX VCO1 (Q1, D1, D2), RX VCO2 (Q2, D5, D6) and TX VCO (Q3, D9, D10). The RX VCO1 oscillates the 1st LO signals for 435 MHz/485 MHz ((Low band/High band) and higher, and the RX VCO2 oscillates the 1st LO signals for 435 MHz/485 MHz ((Low band/High band) and lower frequencies. And the TX VCO oscillates the transmit output signal.

• RX VCO1 and RX VCO2

The RX VCO1/RX VCO2 (Q1, D1, D2/Q2, D5, D6) oscillates the 1st LO signals. The output signals are amplified by the buffer amplifiers (Q4, Q6), and applied to the 1st mixer (Q37) via TX/RX switch (D14 is OFF, D15 is ON) and LPF (L38, C160, C161), to be mixed with the received signals to produce the 46.35 MHz 1st IF signal.

• TX VCO

The TX VCO (Q3, D9, D10) oscillates the transmit signal. The output signal is applied to the transmit amplifiers via the buffer amplifiers (Q4, Q6) and TX/RX switch (D14 is ON, D15 is OFF).

A portion of the each VCO output is applied to the PLL IC (IC1, pin 6) via the buffer amplifiers (Q4, Q5) and the tunable BPF (D16, D17, L40, C151, C152, C154).

5-3-2 PLL CIRCUIT (MAIN UNIT)

The PLL circuit provides stable oscillation of the transmit frequency and receive 1st LO frequency. The PLL output frequency is controlled by the divided ratio (N-data) from the CPU.

• APC CIRCUIT

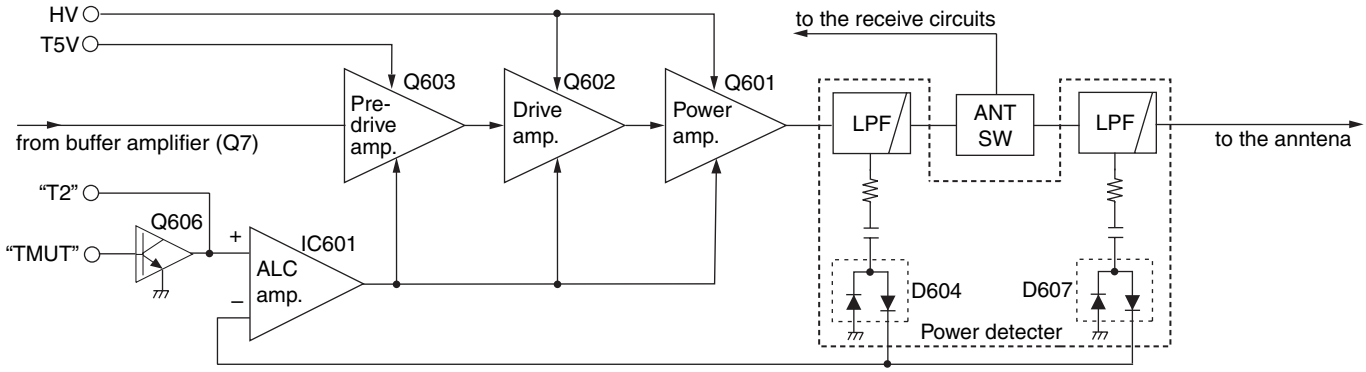

The buffer-amplified VCO output signals from the tunable BPF (L601–L603, C601–C607) are applied to the PLL IC (IC1, pin 6). The applied signals are divided at the prescaler and programmable counter according to the “SSD” signal from the CPU (IC18, pin 10). The divided signal is phase-compared with the reference frequency signal from the reference frequency oscillator (X1), at the phase detector.

The phase difference is output from pin 4 as a pulse type signal after being passed through the internal charge pump. The output signal is converted into the DC voltage (lock voltage) by passing through the loop filter (R7, R8, R12, C14, C16, C19). The lock voltage is applied to the varacter diodes (D1 and D2 of RX VCO1, D5 and D6 of RX VCO2, D9 and D10 of TX VCO) and locked to keep the VCO frequency constant.

If the oscillated signal drifts, its phase changes from that of the reference frequency, causing a lock voltage change to compensate for the drift in the VCO oscillating frequency.

• PLL CIRCUIT

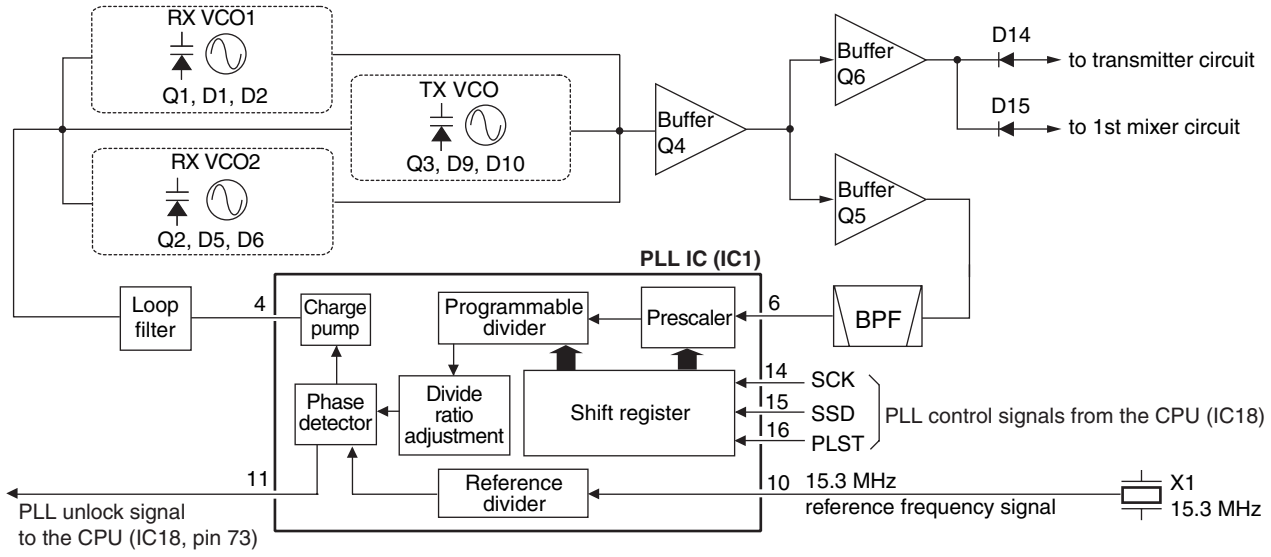

5-4 POWER SUPPLY CIRCUITS (MAIN UNIT)

Voltage from the attached battery pack is routed to whole of the circuit in the transceiver via switches and regulators.

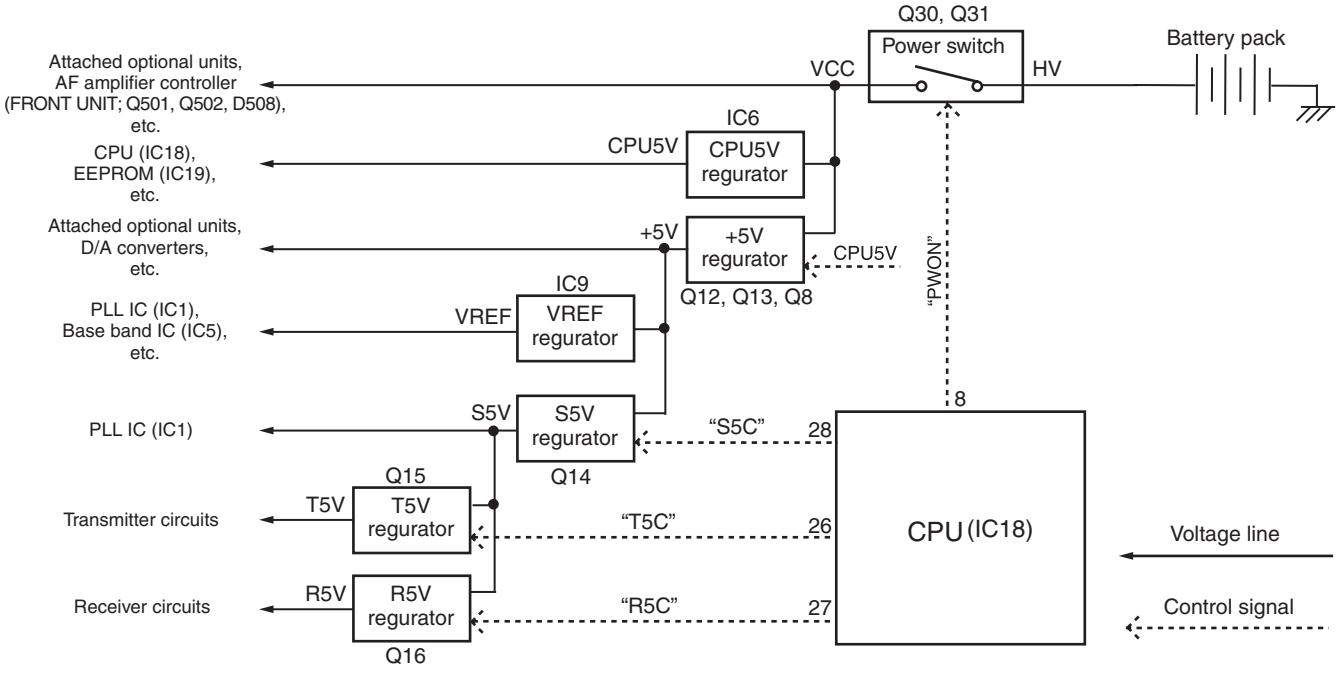

5-5 PORT ALLOCATIONS

5-5-1 CPU (MAIN UNIT; IC18)

Pin No.	Port Name	Description
1	DSDA	Outputs serial data to the D/A converter (IC20, pin 6).
2	DAST	Outputs strobe signal to the D/A converter (IC4, pin 6).
3	SIDE3	Input port for [Side3] key (S4). "Low"=When the key is pushed.
4–7	CBI0–3	Input ports for [ROTARY SELECTOR] (VR UNIT; S701).
10	SSO	Outputs serial data to the PLL IC (IC1, pin 15), D/A converter (IC4, pin 8).
11	SCK	Outputs serial crock signal to the PLL IC (IC1, pin 14), D/A converter (IC4, pin 8).
13	PLST	Outputs PLL strobe signal to the PLL IC (RF UNIT; IC1, pin 16).
15	DASW	Outputs mode (Digital/Analog) switching signal to the D/A converter (IC14, pins 10, 11).
17	TMUT	Outputs transmit mute signal to the transmit mute switch (RF UNIT; Q606).
18	NWC2	Outputs Narrow/Wide mode switching signal to the bandwidth switches (Q26, D32, D33).
19	NWC1	Outputs Narrow/Wide mode switching signal to the bandwidth switches (Q27, Q41, Q42, D34, D35).
20	DDSD	Outputs serial data to the DTMF decode IC (IC10, pin 9).
21	DDAC	Outputs serial clock signal to the DTMF decode IC (IC10, pin 11).
26	T5C	Outputs T5V line control signal to the T5V regulator (Q15). "Low"= While transmitting.
27	R5C	Output R5V line control signal to the R5V regulator (Q16). "Low"= While receiving.
28	S5C	Output S5V line control signal to the S5V regulator (Q14). "Low"=While power save mode.
29	PTTSW	Input port for [PTT] switch (S3). "Low"=When the switch is pushed.
30	SIDE2	Input port for [Side2] key (S5). "Low"=When the key is pushed.
32	RMUT	Outputs mute signal to the AF mute switch (D42).
37	NOIS	Input port for the noise level from the FM IF IC (IC3, pin 13).
38	POSW	Input port for power switch (VR UNIT; R702) from power controller (D36).
39	DDST	Outputs strobe signal to the DTMF decode IC (MAIN UNIT; IC10, pin 14).
40	MTCK	Outputs serial clock signal to the base band IC (MAIN UNIT; IC5, pin 9).
41	PWON	Outputs VCC line control signal to the power switch (Q30, Q31). "Low"=While the power is ON.
43	SENC	Outputs single tone encode signal to the LPF (IC17, pin 10).
44	BEEP	Outputs beep sound to the AF circuits (IC4, pin 13).
45	SDEC	Input port for decoded 2/5 tone and DTMF signals.
46	CDEC	Input port for decoded CTCSS/DTCS signal.
48	BATV	Input port for remaining battery power.
49	LVIN	Input port for VCO lock voltage.
50	RSSI	Input port for RSSI signal from the FM IF IC (IC3, pin 12).
55	EMER	Input port for [Emer] switch (VR UNIT; S702).
70	CSFT	Outputs CPU clock frequency shift signal to the CPU clock oscillator (X2, D38).
71	DUSE	Outputs CTCSS/DTCS select signal to the CTCSS/DTCS switch (Q34).
73	UNLK	Input port for PLL unlock detect signal from the PLL IC (IC1, pin 11).
74	RLED	Outputs RX indicator (VR UNIT; DS701) control signal to the LED driver (VR UNIT; Q701).
75	TLED	Outputs TX indicator (VR UNIT; DS701) control signal to the LED driver (VR UNIT; Q701).
78	FSDA	Outputs serial data to the expand IC (FRONT UNIT; IC505, pin 3).
79	FSCL	Outputs serial clock signal to the expand IC (FRONT UNIT; IC505, pin 3).
81	CIRQ	Input port for external connection detect signal from J1 and J2.
88	SIDE1	Input port for [Side1] key (S6). "Low"=When the key is pushed.
89–91	CENC0–2	Output CTCSS/DTCS signals to the LPF (IC17, pin 3).
92	EMPH	Outputs emphasis characteristic change signal to the D/A converter (IC13, pins 9, 10).
93	MTDT	Outputs serial data to the base band IC (IC5, pin 10).
96	MSCK	Outputs serial clock signal to the base band IC (MAIN UNIT; IC5, pin 13).
97	PMFM	Outputs modulation mode switching signal to the PM/FM switch (IC13, pin 11) .
98	ESDA	Outputs serial data to the EEPROM (IC19, pin 5).
99	ESCL	Outputs serial clock signal to the EEPROM (IC19, pin 6).
100	RESL	Input port for reset signal from the reset IC (IC8, pin 1).

5-5-2 D/A CONVERTER (MAIN UNIT; IC20)

Pin No.	Port Name	Description
1	T1	Outputs BPF tuning voltage to the tunable BPF (D21–D24, L31, L32, C120–C122, C125–C127).
2	T2	• **While receiving** Outputs BPF tuning voltage to the tunable BPF (D28, D29, L33, L34, C141–C144, C147). • **While transmitting** Outputs TX power setting voltage to the APC amplifier (RF UNIT; IC601).
3	TXLVA	Outputs oscillating frequency adjust voltage to the TX VCO (Q3, D9, D10).
4	RXLVA	Outputs oscillating frequency adjust voltage to the RX VCO1/2 (Q1, D1, D2/Q2, D5, D6).

5-5-3 EXPAND IC (FRONT UNIT; IC505)

Pin No.	Port Name	Description
4	AFON	Outputs AF power amplifier (IC508, IC509) control signal to the AF power amplifier controller (Q501, Q502, D508).
5	LIGH	Outputs backlight control signal to the backlight driver (Q507–Q509).
6	SPCON	Outputs internal/external speaker select signal to the SP/ESP switch (Q512, Q513).
7	MCON	Outputs internal/external microphone select signal to the microphone controller (Q505, D504).

SECTION 6 ADJUSTMENT PROCEDURES

6-1 PREPARATION

When adjusting IC-F4060 series, the optional CS-F3060 ADJ ADJUSTMENT SOFTWARE (Rev. 1.1 or later), OPC-966 JIG CABLE (modified OPC-966 CLONING CABLE; see illustration page 5-2) and the following equipments are required.

■ REQUIRED TEST EQUIPMENS

EQUIPMENT	GRADE AND RANGE	EQUIPMENT	GRADE AND RANGE
FM deviation meter	Frequency range : DC–600 MHz Measuring range : 0 to ±10 kHz	Attenuator	Power attenuation : 20 or 30 dB Capacity : 10 W
Frequency counter	Frequency range : 0.1–600 MHz Frequency accuracy : ±1 ppm or better Sensitivity : 100 mV or better	Standard signal generator (SSG)	Frequency range : 0.1–600 MHz Output level : 0.1 µV to 32 mV (–127 to –17 dBm)
RF power meter	Measuring range : 0.1–10 W Frequency range : 100–600 MHz Impedance : 50 Ω SWR : Better than 1.2 : 1	Oscilloscope	Frequency rang : DC–20 MHz Measuring range : 0.01–20 V
		External speaker	Input impedance : 8 Ω Capacity : 1 W or more

■ SYSTEM REQUIREMENTS

- Microsoft® Windows® 98/98SE/Me/2000/XP
- RS-232C serial port (D-sub 9 pin)

■ ADJUSTMENYT SOFTWARE INSTALLATION

① Quit all applications when Windows is running.
② Insert the CD into the appropriate CD drive.
③ Double-click the “Setup.exe” contained in the ‘CS-F3060 ADJ’ folder in the CD drive.
④ The “Welcome to the InstallShield Wizard for CS-F3060 ADJ” will appear. Click [Next>].
⑤ The “Choose Destination Location” will appear. Then click [Next>] to install the software to the destination folder. (e.g. C:\Program Files\Icom\CS-F3060 ADJ)
⑥ After the installation is completed, the “InstallShield Wizard Complete” will appear. Then click [Finish].
⑦ Eject the CD.
⑧ Program group ‘CS-F3060 ADJ’ appears in the ‘Programs’ folder of the start menu, and ‘CS-F3060 ADJ’ icon appears on the desk top screen.

■ BEFORE STARTING SOFTWARE ADJUSTMENT

Clone the adjustment frequencies into the transceiver, and set the configuration using the CS-F3060 CLONING SOFTWARE before starting the software adjustment. Otherwise, the software adjustment can not be started.

CAUTION!: BACK UP the originally programmed memory data in the transceiver before programming the adjustment frequencies.
When program the adjustment frequencies into the transceiver, the transceiver’s memory data will be overwritten and lose original memory data at the same time.

Microsoft and Windows are registered trademarks of Microsoft Corporation in the U.S.A. and other countries.

■ STARTING SOFTWARE ADJUSTMENT

① Connect the transceiver and PC with OPC-966 JIG CABLE.
② Turn the transceiver power ON.
③ Boot up Windows, and click the program group ‘CS-F3060 ADJ’ in the ‘Programs’ folder of the [Start] menu, then CS-F3060 series ADJ’s window appears.
④ Click ‘Connect’ on the CS-F3060 ADJ’s window, then appears transceiver’s up-to-date condition.
⑤ Set or modify adjustment data as specified.

• ADJUSTMENT FREQUENCY LIST

CH	FREQUENCY (MHz)		ADJUSTMENT ITEM
	Low band	High band	
1	400.000	450.000	TX power : Low1 Mode : Wide
2	435.000	485.000	TX power : Low1 Mode : Wdie
3	470.000	520.000	TX power : Low1 Mode : Wide
4	434.950	484.950	TX power : Low1 Mode : Wide
5	435.000	485.000	TX power : High Mode : Wide
6	435.000	485.000	TX power : Low2 Mode : Wide
7	435.000	485.000	TX power : Low1 Mode : Narrow
8	400.000	450.000	TX power : Low1 Mode : Narrow
9	470.000	520.000	TX power : Low1 Mode : Narrow
10*	435.000	–	TX power : Low1 Mode : Middle
11*	400.000	–	TX power : Low1 Mode : Middle
12*	470.000	–	TX power : Low1 Mode : Middle
13†	435.000	485.000	TX power : Low1 Mode : Digital
14†	400.000	450.000	TX power : Low1 Mode : Digital
15†	470.000	520.000	TX power : Low1 Mode : Digital
16	435.000	485.000	TX power : Low1 Mode : Wide CTCSS : 151.4 Hz

*; [EUR-01] only
†; Necessary only when the optional UT-119S/H is installed.

• CONNECTION

Standard signal generator
0.1 µV to 32 mV
(–127 dBm to –17 dBm)

CAUTION!
DO NOT transmit while the SSG is connected to the antenna connector

to the antenna connector

Attenuator
20 dB or 30 dB

FM
deviation meter

Osciiloscope

RF power meter
0.1–10 W/50 Ω

Frequency
counter

RS-232C cable

PC

OPC-966
(JIG CABLE)

IC-F4060 series

• JIG cable

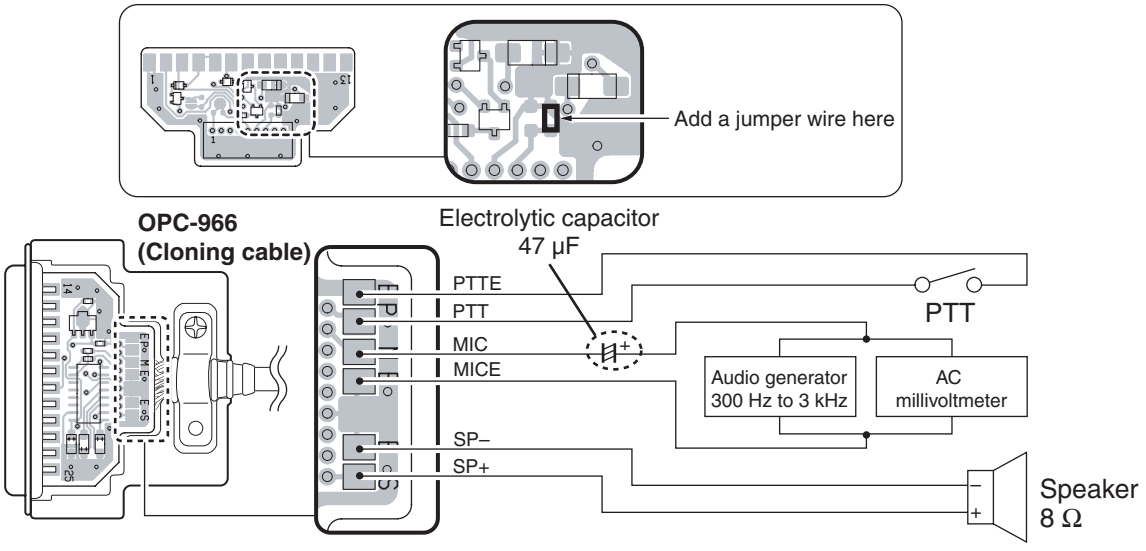

• **PC SCREEN EXAMPLE**

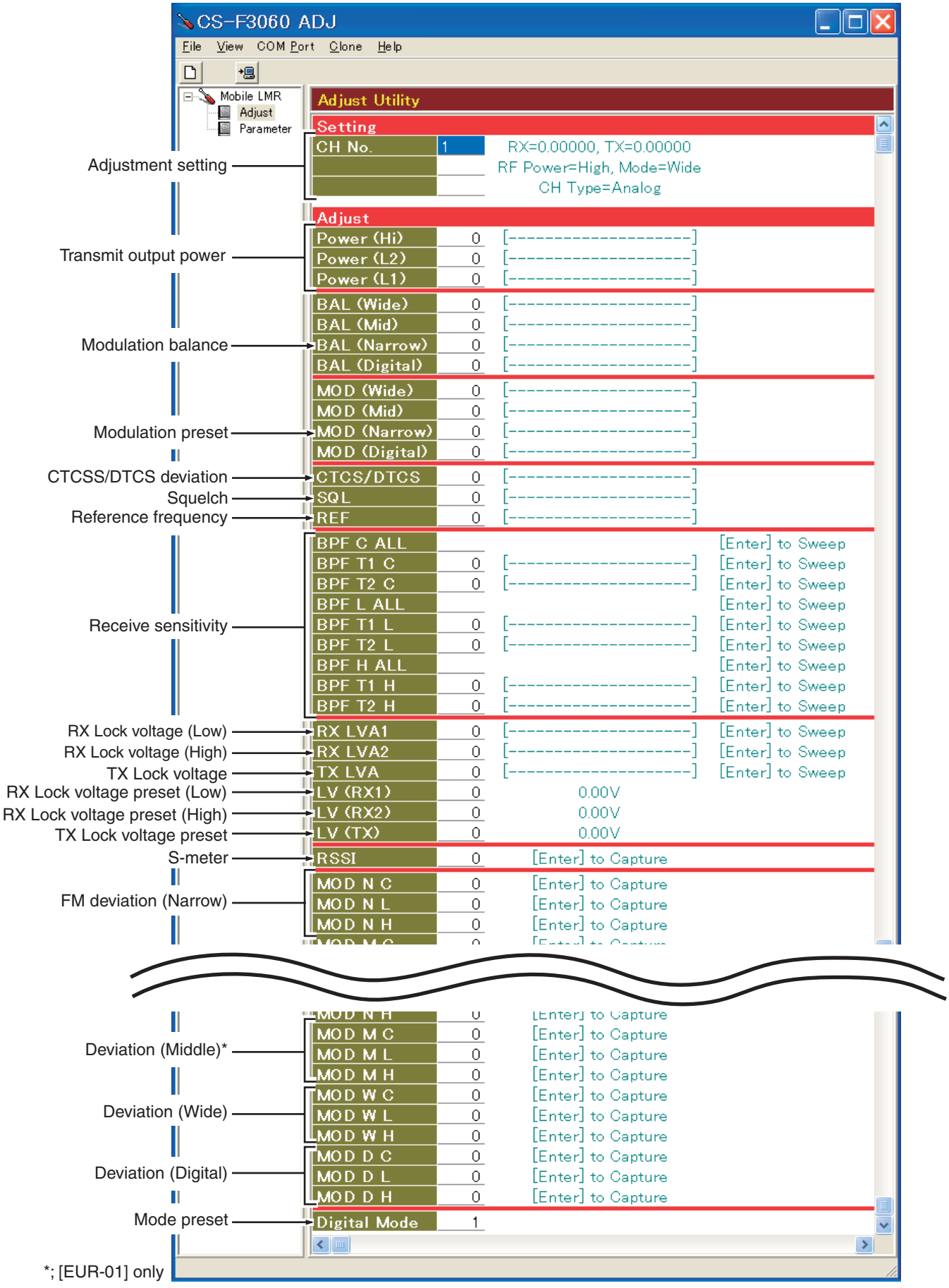

NOTE: The above values for settings are example only.
Each transceiver has its own specific values for each setting.

5-2 FREQUENCY ADJUSTMENT

Select an adjustment item using [↑] / [↓] keys, then set to the specified value using [←] / [→] keys on the connected PC's keyboard.

ADJUSTMENT		ADJUSTMENT CONDITION	MEASUREMENT		VALUE
			UNIT	OPERATION	
PLL LOCK VOLTAGE [RX LVA1]	1	• Channel : 1 • Lock voltage preset [LV (RX1)] : 51 [1.00 V] • Receiving	PC screen	Click [I/O Check] in the Clone menu to open the "I/O Check window." Click [Update (F5)] button, then check the "LVIN" item on the CS-F3060 ADJ's screen as below.	1.00 V
[RX LVA2]	2	• Channel : 2 • Lock voltage preset [LV (RX2)] : 51 [1.00 V] • Receiving			
[TX LVA]	3	• Channel : 1 • Lock voltage preset [LV (TX)] : 51 [1.00 V] • Transmitting			
PLL LOCK VOLTAGE	1	• Channel : 4 • Receiving	PC screen	Click [Update (F5)] button, then check the "LVIN" item on the CS-F3060 ADJ's screen.	3.4–4.4 V (Verify)
	2	• Channel : 3 • Receiving			
	3	• Channel : 3 • Transmitting			
REFERENCE FREQUENCY [REF]		• Channel : 3 • Connect an RF power meter to the antenna connector. • Transmitting	Top panel	Loosely couple a frequency counter to the antenna connector.	470.000000 MHz (Low band) 520.000000 MHz (High band)

• I/O Check window

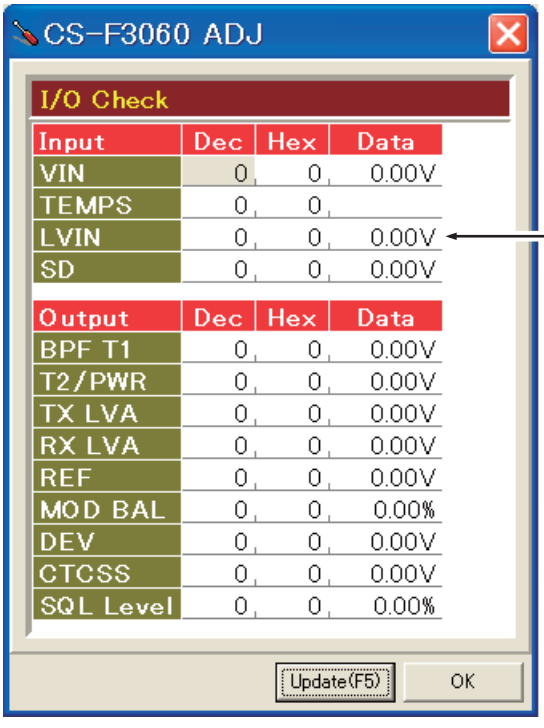

Lock voltage check

5-3 TRANSMIT ADJUSTMENT

Select an adjustment item using [↑] / [↓] keys, then set to the specified value using [←] / [→] keys on the connected PC's keyboard.

ADJUSTMENT		ADJUSTMENT CONDITION	MEASUREMENT		VALUE
			UNIT	OPERATION	
OUTPUT POWER [Power (Hi)]	1	• Channel : 5 • Transmitting	Top panel	Connect an RF power meter to the antenna connector.	5.0 W
[Power (L2)]	2	• Channel : 6 • Transmitting			2.0 W
[Power (L1)]	3	• Channel : 2 • Transmitting			1.0 W
MODULATION BALANCE [BAL (Narrow)]	1	• Channel : 7 • Preset [MOD Narrow] : 80 • No audio applied to the JIG cable. • Set an FM deviation meter same as; HPF : OFF LPF : 20 kHz De-emphasis : OFF Detector : (P–P)/2 • Push [P0] key while transmitting.	Top panel	Connect the FM deviation meter to the antenna connector through an attenuator.	Set to square wave form 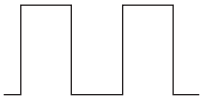
FM DEVIATION (NARROW) [MOD N C]	1	• Channel : 7 • Connect an audio generator to the JIG cable and set as; Frequency : 1.0 kHz Level : 150 mV rms • Set the FM deviation meter to same condition as "MODULATION BALANCE." • Transmitting	Top panel	Connect the FM deviation meter to the antenna connector through an attenuator.	±2.05 to ±2.15 kHz
(NARROW) [MOD N L]	2	• Channel : 8 • Transmitting			
(NARROW) [MOD N H]	3	• Channel : 9 • Transmitting			
(WIDE) [MOD W C]	4	• Channel : 2 • Transmitting			±4.05 to ±4.15 kHz
(WIDE) [MOD W L]	5	• Channel : 1 • Transmitting			
(WIDE) [MOD W H]	6	• Channel : 3 • Transmitting			
(MIDDLE)* [MOD M C]	7	• Channel : 10 • Transmitting			±3.2 to ±3.3 kHz
(MIDDLE)* [MOD M L]	8	• Channel : 11 • Transmitting			
(MIDDLE)* [MOD M H]	9	• Channel : 12 • Transmitting			
DIGITAL DEVIATION† [MOD D C]	1	• Channel : 13 • Preset [Digital Mode] : 7 • Set the FM deviation meter to same condition as "MODULATION BALANCE." • Transmitting	Top panel	Connect an FM deviation meter to the antenna connector through an attenuator.	±1.41 to ±1.45 kHz
[MOD D L]	2	• Channel : 14 • Transmitting			
[MOD D H]	3	• Channel : 15 • Transmitting			
CTCSS/DTCS DEVIATION [CTCSS/DTCS]	1	• Channel : 16 • No audio applied to the JIG cable. • Set the FM deviation meter to same condition as "MODULATION BALANCE." • Transmitting	Top panel	Connect an FM deviation meter to the antenna connector through an attenuator.	±0.68 to ±0.72 kHz

*; [EUR-01] only.
†; Necessary only when the optional UT-119S/H is installed.

5-4 RECEIVE ADJUSTMENT

Select an adjustment item using [↑] / [↓] keys, then set to the specified value using [←] / [→] keys on the connected PC's keyboard.

ADJUSTMENT		ADJUSTMENT CONDITION	MEASUREMENT		VALUE
			UNIT	LOCATION	
RECEIVE SENSITIVITY [BPF C ALL]	**NOTE:** "RECEIVE SENSITIVITY" must be adjusted before "S-METER." Otherwise, "S-METER" will not be adjusted properly.				
	1	• Channel : 1 • Connect the SSG to the antenna connector and set as; Frequency : 400 MHz (low band) 450 MHz (High band) Level : +20 dBμ† (–87 dBm) Modulation : 1 kHz Deviation : ±3.5 kHz • Receiving	Multi connector	Connect the SINAD meter with an 8 Ω load to the JIG cable.	Minimum distortion level
S-METER [RSSI]	1	• Channel : 1 • Connect the SSG to the antenna connector and set as; Frequency : 400 MHz (low band) 450 MHz (High band) Level : +23 dBμ† (–84 dBm) Modulation : 1 kHz Deviation : ±3.5 kHz • Receiving	Push the [ENTER] key on the connected PC's keyboard to set "S3" level.		
	2	• Set the SSG as; Level : –7dBμ† (–114 dBm) • Receiving	Push the [ENTER] key on the connected PC's keyboard to set "S1" level.		
SQUELCH [SQL]	1	• Channel : 1 • Close the squelch by adjusting the value of [SQL] item on the CS-F3060 ADJ's screen. • Connect the SSG to the antenna connector and set as; Frequency : 400 MHz (low band) 450 MHz (High band) Level : –14 dBμ† (–121 dBm) Modulation : 1 kHz Deviation : ±3.5 kHz • Receiving	External speaker	Connect an 8 Ω speaker to the JIG cable.	Set the [SQL] to the value that the audio signals just appears.

†; The output level of the standard signal generator (SSG) is indicated as the SSG's open circuit.

SECTION 7 PARTS LIST

• IC-F4061/F4062/F4063/T/S

[FRONT UNIT]

REF NO.	ORDER NO.	DESCRIPTION	M.	H/V LOCATION
IC501	1180002401	S.REG S-812C30AMC-C2K-G	B	66.7/35.7
IC505	1110006440	S.IC M62320FP DF5J	B	74/36.8
IC506	1110006440	S.IC M62320FP DF5J	B	56.8/24.5
IC508	1110006770	S.IC TDA8547TS/N	B	79.6/11.9
IC509	1110005330	S.IC NJM12904V-TE1	B	79.8/24.9
Q501	1520000460	S.TR 2SB1132 T100 R	B	75.2/25
Q502	1590001190	S.TR XP6501-(TX) .AB	B	75.8/20.8
Q505	1590002230	S.TR UMG2N TL	B	71.5/22
Q506	1590003230	S.TR UNR9113J-(TX)	B	83.3/41
Q507	1590003290	S.TR UNR9213J-(TX)	B	72.3/6.1
Q508	1590001330	S.TR DTA114EUA T106	B	72.2/9
Q509	1590000980	S.TR DTB123EK T146	B	72.4/12.3
Q512	1590003290	S.TR UNR9213J-(TX)	B	72/18
Q513	1590003290	S.TR UNR9213J-(TX)	B	74.9/15.6
Q514	1590003230	S.TR UNR9113J-(TX)	B	67.6/26.8
Q515	1560001360	S.FET 2SK3019 TL	B	81/32.2
Q516	1590003290	S.TR UNR9213J-(TX)	B	80.9/36
D502	1790001250	S.DIO MA2S111-(TX)	B	71/23.9
D503	1790001250	S.DIO MA2S111-(TX)	B	66.8/21.1
D504	1790001250	S.DIO MA2S111-(TX)	B	71/25.1
D505	1160000140	S.DIO DAP222 TL	B	63.6/21.9
D506	1160000140	S.DIO DAP222 TL	B	63.6/26
D508	1160000060	S.DIO DAN202U T106	B	75.1/5.7
R503	7030009140	S.RES ERJ2GEJ 272 X (2.7 k)	B	74/20
R504	7030008290	S.RES ERJ2GEJ 183 X (18 k)	B	74.8/18.4
R505	7030005120	S.RES ERJ2GEJ 102 X (1 k)	B	76.6/18.4
R506	7030005120	S.RES ERJ2GEJ 102 X (1 k)	B	75.2/13.7
R508	7030005050	S.RES ERJ2GEJ 103 X (10 k)	B	81.8/18.2
R509	7030005050	S.RES ERJ2GEJ 103 X (10 k)	B	79.1/18.2
R510	7030005080	S.RES ERJ2GEJ 823 X (82 k)	B	81.7/16.6
R511	7030005090	S.RES ERJ2GEJ 104 X (100 k)	B	78.3/16.6
R513	7030005050	S.RES ERJ2GEJ 103 X (10 k)	B	85.2/41.1
R514	7030005060	S.RES ERJ2GEJ 333 X (33 k)	B	87.5/38.8
R515	7030005080	S.RES ERJ2GEJ 823 X (82 k)	B	81.8/34
R516	7030005090	S.RES ERJ2GEJ 104 X (100 k)	B	79.4/32.4
R517	7030005120	S.RES ERJ2GEJ 102 X (1 k)	B	67.4/24.8
R518	7030005120	S.RES ERJ2GEJ 102 X (1 k)	B	66.2/22.5
R519	7030005050	S.RES ERJ2GEJ 103 X (10 k)	B	69.4/22.3
R520	7030005050	S.RES ERJ2GEJ 103 X (10 k)	B	69.4/20.7
R521	7030005050	S.RES ERJ2GEJ 103 X (10 k)	B	68.3/24.8
R522	7030005090	S.RES ERJ2GEJ 104 X (100 k)	B	53.6/18.8
R523	7030005090	S.RES ERJ2GEJ 104 X (100 k)	B	54.6/18.8
R524	7030005090	S.RES ERJ2GEJ 104 X (100 k)	B	55.6/18.8
R525	7030005090	S.RES ERJ2GEJ 104 X (100 k)	B	56.6/18.8
R526	7030005090	S.RES ERJ2GEJ 104 X (100 k)	B	65.2/22.1
R527	7030005090	S.RES ERJ2GEJ 104 X (100 k)	B	63.6/23.5
R528	7030005090	S.RES ERJ2GEJ 104 X (100 k)	B	63.6/24.4
R529	7030005090	S.RES ERJ2GEJ 104 X (100 k)	B	65/24.7
R530	7030009280	S.RES ERJ2GEJ 391 X (390)	B	71.6/14.4
R531	7030005000	S.RES ERJ2GEJ 471 X (470)	B	82.7/33
R532	7030005090	S.RES ERJ2GEJ 104 X (100 k)	B	65.2/28
R533	7030007250	S.RES ERJ2GEJ 220 X (22)	B	63.6/27.6
R534	7030007250	S.RES ERJ2GEJ 220 X (22)	B	63.6/28.6
R535	7030004970	S.RES ERJ2GEJ 470 X (47)	B	69.7/3.4
R536	7030004970	S.RES ERJ2GEJ 470 X (47)	B	69.7/5.4
R537	7030005120	S.RES ERJ2GEJ 102 X (1 k)	B	69.7/4.4
R538	7030005120	S.RES ERJ2GEJ 102 X (1 k)	B	72/3.1
R539	7030005050	S.RES ERJ2GEJ 103 X (10 k)	B	69.7/2.4
R540	7030007340	S.RES ERJ2GEJ 153 X (15 k)	B	80.3/20.2
R541	7030005090	S.RES ERJ2GEJ 104 X (100 k)	B	79.4/20.2
R542	7030005220	S.RES ERJ2GEJ 223 X (22 k)	B	81.7/28.3
R543	7030007340	S.RES ERJ2GEJ 153 X (15 k)	B	82.6/27.1
R544	7030004980	S.RES ERJ2GEJ 101 X (100)	B	82.6/29.9
R546	7030009280	S.RES ERJ2GEJ 391 X [10-key type] only	B	71.6/15.3
R547	7030009280	S.RES ERJ2GEJ 391 X [10-key type] only	B	71.6/16.2
R548	7030005230	S.RES ERJ2GEJ 334 X (330 k)	B	74.4/8.5
R552	7030005090	S.RES ERJ2GEJ 104 X (100 k)	B	79.8/30.4
R553	7030005090	S.RES ERJ2GEJ 104 X (100 k) [4-key type] only	B	71/42
R554	7030005090	S.RES ERJ2GEJ 104 X (100 k) [10-key type] only	B	72.6/42
R555	7030005050	S.RES ERJ2GEJ 103 X (10 k)	B	74.4/9.4
R557	7030004970	S.RES ERJ2GEJ 470 X (47)	B	87/34.7
R558	7030005040	S.RES ERJ2GEJ 472 X (4.7 k)	B	73.9/18.4
R559	7030005040	S.RES ERJ2GEJ 472 X (4.7 k)	B	77.4/16.6
R560	7030005040	S.RES ERJ2GEJ 472 X (4.7 k)	B	77.5/18.4
R561	7030005000	S.RES ERJ2GEJ 471 X (470)	B	82.7/22.7

[L]=Low band [H]=High band

[FRONT UNIT]

REF NO.	ORDER NO.	DESCRIPTION	M.	H/V LOCATION
R562	7030005000	S.RES ERJ2GEJ 471 X (470)	B	83.4/20.3
R563	7030005050	S.RES ERJ2GEJ 103 X (10 k)	B	80.4/16.6
R564	7030005050	S.RES ERJ2GEJ 103 X (10 k)	B	79.5/16.6
R566	7030010040	S.RES ERJ2GEJ-JPW	B	77.6/20.2
R567	7030005090	S.RES ERJ2GEJ 104 X (100 k)	B	81/30.4
C501	4550006760	S.TAN TEESVB21A336M8R	B	93.4/37.3
C502	4550006760	S.TAN TEESVB21A336M8R	B	96.7/37.3
C506	4550006250	S.TAN TEESVA 1A 106M8R	B	75.8/31.1
C507	4550006250	S.TAN TEESVA 1A 106M8R	B	70.5/29
C508	4550006250	S.TAN TEESVA 1A 106M8R	B	70.5/31.1
C509	4030017460	S.CER ECJ0EB1E102K	B	75.6/12.5
C510	4030016930	S.CER ECJ0EB1A104K	B	73.1/20
C511	4030017460	S.CER ECJ0EB1E102K	B	75.7/18.4
C514	4550006250	S.TAN TEESVA 1A 106M8R	B	78.5/5.4
C515	4030016930	S.CER ECJ0EB1A104K	B	80.9/18.2
C517	4030016930	S.CER ECJ0EB1A104K	B	80/18.2
C518	4030017460	S.CER ECJ0EB1E102K	B	71.9/26.7
C520	4030017460	S.CER ECJ0EB1E102K	B	87/41.1
C522	4030016930	S.CER ECJ0EB1A104K	B	84.7/39.9
C523	4030016930	S.CER ECJ0EB1A104K	B	80/34
C524	4030017460	S.CER ECJ0EB1E102K	B	68.5/20.7
C525	4030016930	S.CER ECJ0EB1A104K	B	80.9/34
C526	4030017460	S.CER ECJ0EB1E102K	B	70.9/26.7
C527	4030017460	S.CER ECJ0EB1E102K	B	86.1/41.1
C528	4030016930	S.CER ECJ0EB1A104K	B	80/40.6
C529	4030016930	S.CER ECJ0EB1A104K	B	58/29.5
C530	4030017460	S.CER ECJ0EB1E102K	B	80/41.6
C531	4030017460	S.CER ECJ0EB1E102K	B	56.4/29.5
C532	4550007090	S.TAN TEESVA 1A 226M8R	B	67.4/39.9
C534	4030016930	S.CER ECJ0EB1A104K	B	65.8/38.2
C535	4030016790	S.CER ECJ0EB1C103K	B	64.9/38.2
C536	4550005980	S.TAN TEESVA 1A 475M8R	B	67/31.5
C537	4030016930	S.CER ECJ0EB1A104K	B	55/37.7
C538	4550000460	S.TAN TEESVA 1C 105M8R	B	54.6/31.9
C539	4030016930	S.CER ECJ0EB1A104K	B	82.6/28.3
C540	4030018140	S.CER ECJ0EB1H391K	B	81.2/20.2
C541	4030016930	S.CER ECJ0EB1A104K	B	74.4/7.6
C542	4030017440	S.CER ECJ0EC1H221J	B	79.8/29.4
C543	4550006250	S.TAN TEESVA 1A 106M8R	B	75.8/29
C544	4030017460	S.CER ECJ0EB1E102K	B	82.6/26.2
C559	4030016790	S.CER ECJ0EB1C103K	T	87.9/28
C560	4030017770	S.CER ECJ0EB1E332K	B	78.5/20.2
C561	4030016930	S.CER ECJ0EB1A104K	B	82.4/31.1
J501	6510025240	S.CNR IMSA-9631S-20Y912	B	63.5/11.4
J502	6510025250	S.CNR IMSA-9631S-08Y912	B	58.8/35.5
J503	6510025260	S.CNR IMSA-9631S-10Y912	B	89.8/24.4
DS501	5040002960	S.LED SML-A12MT T86	T	82.9/33.6
DS502	5040002960	S.LED SML-A12MT T86	T	82.9/23.1
DS503	5040002960	S.LED SML-A12MT T86	T	82.9/12.6
DS504	5040002420	S.LED SML-310MT T86	T	38.1/12.9
DS505	5040002420	S.LED SML-310MT T86	T	38.1/30.9
DS506	5040002420	S.LED SML-310MT T86 [10-key type] only	T	29.2/14.9
DS507	5040002420	S.LED SML-310MT T86 [10-key type] only	T	29.2/28.9
DS508	5040002420	S.LED SML-310MT T86 [10-key type] only	T	11.7/14.9
DS509	5040002420	S.LED SML-310MT T86 [10-key type] only	T	11.7/28.9
DS510	5030002830	LCD M4-0078TAY-2		
MC501	7700002480	MIC SKB-2746 LPC		
W501	9028930010	WIR 23/04/020/W02/W02		
W502	9014506004	WIR 23/00/025/W02/W02		

M.=Mounted side (T: Mounted on the Top side, B: Mounted on the Bottom side)
S.=Surface mount

[MAIN UNIT]

REF NO.	ORDER NO.	DESCRIPTION		M.	H/V LOCATION
IC1	1130010100	S.IC LMX2352TMX/NOPB		B	58.2/18.3
IC3	1110003491	S.IC TA31136FNG (D,EL)		B	76.6/32.9
IC4	1190001350	S.IC M62364FP 600D		B	42.1/18.1
IC5	1110006221	S.IC AK2346P-E2/P		B	51.3/36.4
IC6	1110005350	S.IC NJM2870F05-TE1		T	103.2/18.9
IC8	1110005771	S.IC S-80942CNMC-G9CT2G		B	13.8/30.1
IC9	1110005340	S.IC NJM12902V-TE1		B	42.4/29.6
IC10	1130012960	S.IC BU8872FS-E2		B	5.4/15.5
IC13	1140013200	S.IC CD4053BPWR		B	41.7/8.2
IC14	1140013200	S.IC CD4053BPWR		B	49.1/8.2
IC15	1110005310	S.IC AN6123MS		T	49.7/23.8
IC17	1110005340	S.IC NJM12902V-TE1		B	25.6/38.1
IC18	1140010191	S.IC HD64F2268TF20V		B	23/23.1
IC19	1140012950	S.IC 24LC512T-I/SM		B	25/6.7
IC20	1190001340	S.IC M62334FP 600C		T	99.4/34.7
IC21	1110003800	S.IC NJM2904V-TE1		B	57.1/30
IC22	1140013200	S.IC CD4053BPWR		B	4.7/29.2
IC24	1130011760	S.IC CD4094BPWR		B	14.7/7.3
Q1	1530002920	S.TR 2SC4226-T1 R25		T	72.4/11.7
Q2	1530002920	S.TR 2SC4226-T1 R25		T	72.4/18.2
Q3	1530002920	S.TR 2SC4226-T1 R25		T	73.1/24.7
Q4	1530003311	S.TR 2SC5107-O (TE85R,F)		T	77.3/16
Q5	1530003980	S.TR 2SC5700WB-TR-E		T	80.6/20
Q6	1530003311	S.TR 2SC5107-O (TE85R,F)		T	80.2/10.5
Q7	1530003311	S.TR 2SC5107-O (TE85R,F)		B	91.2/15
Q8	1590003290	S.TR UNR9213J-(TX)		B	93.8/27.5
Q9	1580000800	S.FET 3SK324UG-TL-E		B	92.6/8.3
Q10	1580000731	S.FET 3SK293 (TE85L,F)		B	105.2/13.2
Q11	1560000841	S.FET 2SK1829 (TE85R,F)		T	104.4/9.2
Q12	1520000460	S.TR 2SB1132 T100 R		T	98.6/23.9
Q13	1590001190	S.TR XP6501-(TX) .AB		B	99.7/24.4
Q14	1510000920	S.TR 2SA1577 T106 Q		B	97.2/23.8
Q15	1510000920	S.TR 2SA1577 T106 Q		B	94.7/21.2
Q16	1510000920	S.TR 2SA1577 T106 Q		T	95.7/11.2
Q17	1530002851	S.TR 2SC4116-BL (TE85R,F)		B	78.8/23.3
Q18	1530002851	S.TR 2SC4116-BL (TE85R,F)		B	66.7/29.6
Q19	1560000541	S.FET 2SK880-Y (T5RICOM,F)		B	62/27.4
Q21	1590001400	S.TR XP1214 (TX)		B	73.2/11.8
Q22	1590001400	S.TR XP1214 (TX)		B	73.3/22
Q23	1590003290	S.TR UNR9213J-(TX)		B	70.6/11.8
Q24	1530002851	S.TR 2SC4116-BL (TE85R,F)		B	78.3/38.6
Q25	1530002601	S.TR 2SC4215-O (TE85R,F)		B	80.5/28.4
Q26	1590003230	S.TR UNR9113J-(TX)		B	68.4/34.3
Q27	1590003230	S.TR UNR9113J-(TX)		T	86/13.7
Q28	1590001650	S.TR XP4601 (TX)		B	63.2/36.3
Q30	1590003321	S.FET TPC6103 (TE85L,F)		T	99.9/19.7
Q31	1590003290	S.TR UNR9213J-(TX)		T	28.9/25
Q32	1560001360	S.FET 2SK3019 TL		B	61.1/13
Q34	1590003290	S.TR UNR9213J-(TX)		B	34.7/35.8
Q35	1590003290	S.TR UNR9213J-(TX)		T	12/27.2
Q40	1590003230	S.TR UNR9113J-(TX)		B	9.2/11.2
Q41	1530002851	S.TR 2SC4116-BL (TE85R,F)		T	86.5/18.4
Q42	1530002851	S.TR 2SC4116-BL (TE85R,F)		T	92/15.5
Q43	1560001360	S.FET 2SK3019 TL		B	51.3/25.2
D1	1750001150	S.VCP HVC383BTRF-E		T	65.9/9.1
D2	1750000711	S.VCP HVC350BTRF-E		T	68.3/11
D5	1750001150	S.VCP HVC383BTRF-E		T	65.9/15.6
D6	1750000711	S.VCP HVC350BTRF-E		T	68.3/17.5
D9	1750000711	S.VCP HVC350BTRF-E	[H]	T	65.9/22
D9	1750001150	S.VCP HVC383BTRF-E	[L]	T	65.9/22
D10	1750000711	S.VCP HVC350BTRF-E		T	68.3/23.8
D11	1720000570	S.VCP MA368 (TX)		B	69.5/26.4
D14	1790001621	S.DIO 1SV308 (TPL3,F)		B	85.8/13.3
D15	1790001260	S.DIO MA2S077-(TX)		B	85.8/12
D16	1790001260	S.DIO MA2S077-(TX)		T	77.6/21.1
D17	1790001260	S.DIO MA2S077-(TX)		T	77.1/25.3
D19	1790001621	S.DIO 1SV308 (TPL3,F)		T	103.9/25.9
D21	1750000711	S.VCP HVC350BTRF-E		B	102.7/22.6
D22	1750000711	S.VCP HVC350BTRF-E		B	101.4/22.6
D23	1750000711	S.VCP HVC350BTRF-E		B	102.6/19.1
D24	1750000711	S.VCP HVC350BTRF-E		B	101.4/19.1
D25	1790001250	S.DIO MA2S111-(TX)		T	100/10.1
D28	1750000711	S.VCP HVC350BTRF-E		B	101.6/12
D29	1750000711	S.VCP HVC350BTRF-E		B	97.9/11.2
D32	1750001070	S.DIO DAN235ETL		T	70.9/39.5
D33	1750001070	S.DIO DAN235ETL		T	70.7/34.2
D34	1750001070	S.DIO DAN235ETL		T	89.8/13.4
D35	1750001070	S.DIO DAN235ETL		B	84.7/26.7
D36	1160000060	S.DIO DAN202U T106		T	31.3/25.3
D37	1730002320	S.ZEN MA8051-M (TX)		T	9/27.1
D38	1790001260	S.DIO MA2S077-(TX)		B	14.4/33.1
D40	1160000050	S.DIO DAP202U T106		B	19/35.5
D41	1790001250	S.DIO MA2S111-(TX)		B	46.5/25
D42	1160000140	S.DIO DAP222 TL		T	18.6/12.7
D43	1790001250	S.DIO MA2S111-(TX)			

[L]=Low band [H]=High band

[MAIN UNIT]

REF NO.	ORDER NO.	DESCRIPTION		M.	H/V LOCATION
FI1	2030000500	S.MLH FL-401 (46.35 MHz)		B	90/23.2
FI2	2020002120	S.CER CFWCA450KGFA-R0		T	65/35
FI3	2020002180	S.CER CFWKA450KHFA-R0		T	76.7/35
FI4	2030000150	S.MLH FL-335 (46.350 MHz)		T	90/23.2
X1	6050012380	S.XTL CR-826 (15.3 MHz)		B	56.6/25.8
X2	6050011720	S.XTL CR-764 (19.6608 MHz)		T	2.9/32.4
X3	6050011730	S.XTL CR-765 (3.6864 MHz)		T	50.9/35.6
X4	6050012320	S.XTL CR-818 (4.194304 MHz)		T	2.9/15.2
X5	6070000190	S.DCR CDBCB450KCAY24-R0		T	84.6/38.2
L2	6200004741	S.COL NLV25T-1R2J		T	64/9.6
L3	6200008510	S.COL 0.30-0.9-4TR 10.5N		T	69.2/9.1
L4	6200004741	S.COL NLV25T-1R2J		T	64/22.6
L5	6200002851	S.COL NLV25T-R82J		T	74.2/9
L6	6200004741	S.COL NLV25T-1R2J		T	66/12.6
L7	6200004741	S.COL NLV25T-1R2J		T	64/16.1
L8	6200008510	S.COL 0.30-0.9-4TR 10.5N		T	69.2/15.6
L9	6200002851	S.COL NLV25T-R82J		T	73.9/15.5
L10	6200004741	S.COL NLV25T-1R2J		T	66/19.1
L11	6200008490	S.COL 0.30-0.9-3TR 7.5N		T	69.2/22.1
L12	6200002851	S.COL NLV25T-R82J		T	73.9/22
L14	6200004741	S.COL NLV25T-1R2J		T	65.3/25.6
L15	6200005711	S.COL ELJRE 27NGFA		T	78.9/18
L16	6200005661	S.COL ELJRE 10NGFA	[H]	T	80.8/22.8
L16	6200005671	S.COL ELJRE 12NGFA	[L]	T	80.8/22.8
L16	6200005691	S.COL ELJRE 18NGFA		T	80.8/22.8
L17	6200005711	S.COL ELJRE 27NGFA	[H]	T	80.3/12.4
L17	6200005721	S.COL ELJRE 33NGFA	[L]	T	80.3/12.4
L18	6200005671	S.COL ELJRE 12NGFA	[H]	B	91.4/16.9
L18	6200005691	S.COL ELJRE 18NGFA	[L]	B	91.4/16.9
L30	6200007720	S.COL LQW2BHN33NJ03L		B	104.4/25.9
L31	6200007690	S.COL LQW2BHN18NJ03L	[H]	B	104.9/22.3
L31	6200007700	S.COL LQW2BHN22NJ03L	[L]	B	104.9/22.3
L32	6200007690	S.COL LQW2BHN18NJ03L	[H]	B	104.9/18.7
L32	6200007700	S.COL LQW2BHN22NJ03L	[L]	B	104.9/18.7
L33	6200007670	S.COL LQW2BHN10NJ03L	[H]	B	103.2/8.8
L33	6200007680	S.COL LQW2BHN12NJ03L	[L]	B	103.2/8.8
L34	6200007230	S.COL LQW2BHN15NJ03L	[L]	B	97.8/9
L34	6200007680	S.COL LQW2BHN12NJ03L	[H]	B	97.8/9
L38	6200005721	S.COL ELJRE 33NGFA		B	93.5/10.8
L40	6200007931	S.COL ELJRF 12NJFB	[L]	T	78.2/25.6
L40	6200007941	S.COL ELJRF 10NJFB	[H]	T	78.2/25.6
L45	6200004480	S.COL MLF1608D R82K-T		B	72.5/29
L46	6200003540	S.COL MLF1608D R22K-T		B	68.7/30.8
L49	6200010740	S.COL C2520C-R27G-A		T	93/8.3
L50	6200004660	S.COL MLF1608A 1R8K-T		B	78.6/28.7
R1	7030005230	S.RES ERJ2GEJ 334 X (330 k)		B	52.7/29.6
R2	7030005050	S.RES ERJ2GEJ 103 X (10 k)		B	53/25.5
R3	7030005230	S.RES ERJ2GEJ 334 X (330 k)		B	50.9/29.5
R4	7030005000	S.RES ERJ2GEJ 471 X (470)		T	57.9/22.4
R5	7030005700	S.RES ERJ2GEJ 274 X (270 k)		B	52.3/30.8
R6	7410001130	S.ARY EXB28V102JX		B	53/15.7
R7	7030010040	S.RES ERJ2GEJ-JPW		B	63.7/21.5
R8	7030005040	S.RES ERJ2GEJ 472 X (4.7 k)		B	64/24.5
R11	7030005050	S.RES ERJ2GEJ 103 X (10 k)		B	64/26.5
R12	7030005030	S.RES ERJ2GEJ 152 X (1.5 k)		B	64/22.7
R14	7030006020	S.RES RR0510P-682-D (6.8 k)		T	70.7/8.6
R15	7030006020	S.RES RR0510P-682-D (6.8 k)		T	70.6/12
R16	7030006020	S.RES RR0510P-682-D (6.8 k)		T	70.7/15.1
R17	7030006020	S.RES RR0510P-682-D (6.8 k)		T	70.6/18.5
R18	7030005530	S.RES ERJ2GEJ 100 X (10)		T	69/25.2
R19	7030006020	S.RES RR0510P-682-D (6.8 k)		T	70.7/21.5
R20	7030006020	S.RES RR0510P-682-D (6.8 k)		T	71.1/25.5
R21	7030009320	S.RES ERJ2GEJ 4R7 X (4.7)		T	71.1/24.6
R22	7030005000	S.RES ERJ2GEJ 471 X (470)	[L]	B	75.2/11.2
R22	7030005010	S.RES ERJ2GEJ 681 X (680)	[H]	B	75.2/11.2
R23	7030005000	S.RES ERJ2GEJ 471 X (470)		B	75.2/13.3
R24	7030005000	S.RES ERJ2GEJ 471 X (470)		B	75.2/22
R25	7030005050	S.RES ERJ2GEJ 103 X (10 k)		B	71/22.7
R26	7030005120	S.RES ERJ2GEJ 102 X (1 k)		B	73.2/16.8
R27	7030005050	S.RES ERJ2GEJ 103 X (10 k)		B	73.2/14.2
R28	7030007290	S.RES ERJ2GEJ 222 X (2.2 k)		B	78.8/21.5
R29	7030005090	S.RES ERJ2GEJ 104 X (100 k)		T	76.8/18.2
R30	7030004980	S.RES ERJ2GEJ 101 X (100)		T	77.3/19.4
R31	7030005310	S.RES ERJ2GEJ 124 X (120 k)		T	81.3/18.4
R32	7030004980	S.RES ERJ2GEJ 101 X (100)		T	81.6/24.2
R33	7030005530	S.RES ERJ2GEJ 100 X (10)		T	77.6/12.4
R34	7030005070	S.RES ERJ2GEJ 683 X (68 k)		T	78.5/12.4
R35	7030005530	S.RES ERJ2GEJ 100 X (10)		T	79.9/14.4
R36	7030010040	S.RES ERJ2GEJ-JPW		T	78.3/9.5
R37	7030005040	S.RES ERJ2GEJ 472 X (4.7 k)		B	84.1/12.9
R38	7030004980	S.RES ERJ2GEJ 101 X (100)		B	86.8/14.7
R40	7030005050	S.RES ERJ2GEJ 103 X (10 k)		B	86.8/16.3
R41	7030007340	S.RES ERJ2GEJ 153 X (15 k)		B	89.3/14.6
R44	7030004970	S.RES ERJ2GEJ 470 X (47)		B	88.3/17.4
R59	7030003860	S.RES ERJ3GE JPW V		T	104.6/31.4
R60	7030005090	S.RES ERJ2GEJ 104 X (100 k)		B	100.3/22

M.=Mounted side (T: Mounted on the Top side, B: Mounted on the Bottom side)
S.=Surface mount

[MAIN UNIT]

REF NO.	ORDER NO.	DESCRIPTION	M.	H/V LOCATION
R61	7030005090	S.RES ERJ2GEJ 104 X (100 k)	B	100.3/18.7
R62	7030005050	S.RES ERJ2GEJ 103 X (10 k)	B	100.9/20.8
R63	7030005080	S.RES ERJ2GEJ 823 X (82 k)	B	105.5/15.7
R64	7030005240	S.RES ERJ2GEJ 473 X (47 k)	B	106.7/14.8
R65	7030004980	S.RES ERJ2GEJ 101 X (100)	B	103/15.6
R66	7030005530	S.RES ERJ2GEJ 100 X (10)	B	106.1/11.1
R68	7030008400	S.RES ERJ2GEJ 182 X (1.8 k)	T	102.1/8.3
R69	7030005170	S.RES ERJ2GEJ 474 X (470 k)	T	102.1/10.1
R70	7030005110	S.RES ERJ2GEJ 224 X (220 k)	T	102.1/9.2
R71	7030005050	S.RES ERJ2GEJ 103 X (10 k)	T	104.9/13.6
R72	7030005530	S.RES ERJ2GEJ 100 X (10)	T	103.1/12.2
R73	7030004970	S.RES ERJ2GEJ 470 X (47)	B	103.4/7.3
R74	7030005120	S.RES ERJ2GEJ 102 X (1 k) [L]	B	103.2/10.3
R74	7030007290	S.RES ERJ2GEJ 222 X (2.2 k) [H]	B	103.2/10.3
R75	7030005090	S.RES ERJ2GEJ 104 X (100 k)	B	101.2/10.1
R76	7030005090	S.RES ERJ2GEJ 104 X (100 k)	B	99.6/10.1
R77	7030005050	S.RES ERJ2GEJ 103 X (10 k)	B	100.5/11.3
R84	7030007340	S.RES ERJ2GEJ 153 X (15 k)	T	78.3/22.8
R85	7030007340	S.RES ERJ2GEJ 153 X (15 k)	T	77.1/23.2
R86	7030005050	S.RES ERJ2GEJ 103 X (10 k)	B	88.1/12.4
R87	7030004980	S.RES ERJ2GEJ 101 X (100)	B	90.5/12.4
R88	7030005580	S.RES ERJ2GEJ 560 X (56)	B	63.7/16
R89	7030007270	S.RES ERJ2GEJ 151 X (150)	T	88.4/17.9
R90	7030007270	S.RES ERJ2GEJ 151 X (150)	T	89.3/17
R91	7030007270	S.RES ERJ2GEJ 151 X (150)	T	88.8/28.3
R92	7030005050	S.RES ERJ2GEJ 103 X (10 k)	T	85.5/20.3
R93	7030007280	S.RES ERJ2GEJ 331 X (330)	T	91.5/17.8
R94	7030005050	S.RES ERJ2GEJ 103 X (10 k)	T	88/15.6
R95	7030005110	S.RES ERJ2GEJ 224 X (220 k)	B	80.8/26.2
R96	7030007280	S.RES ERJ2GEJ 331 X (330)	T	90.2/17
R97	7030007280	S.RES ERJ2GEJ 331 X (330)	B	88.4/28.1
R99	7030005530	S.RES ERJ2GEJ 100 X (10)	B	77.2/27.8
R100	7030005090	S.RES ERJ2GEJ 104 X (100 k)	T	81.7/33.5
R101	7030008400	S.RES ERJ2GEJ 182 X (1.8 k)	T	82.6/33.5
R102	7030007270	S.RES ERJ2GEJ 151 X (150)	B	74.1/28.7
R103	7030004970	S.RES ERJ2GEJ 470 X (47)	B	75.7/28.7
R104	7030005600	S.RES ERJ2GEJ 273 X (27 k)	B	70.2/33.2
R105	7030007300	S.RES ERJ2GEJ 332 X (3.3 k)	T	69.9/35.8
R106	7030009320	S.RES ERJ2GEJ 4R7 X (4.7)	T	69.1/34.6
R107	7030005210	S.RES ERJ2GEJ 822 X (8.2 k)	T	71.6/37.5
R108	7030005210	S.RES ERJ2GEJ 822 X (8.2 k)	T	72.3/34.6
R109	7030007060	S.RES ERJ2GEJ 684X (680 k)	B	64.8/29.4
R110	7030007570	S.RES ERJ2GEJ 122 X (1.2 k)	B	66.6/32.3
R111	7030005600	S.RES ERJ2GEJ 273 X (27 k)	T	70.9/41.5
R112	7030005000	S.RES ERJ2GEJ 471 X (470)	B	79.9/36.3
R113	7030005050	S.RES ERJ2GEJ 103 X (10 k)	B	48/17.9
R114	7030005090	S.RES ERJ2GEJ 104 X (100 k)	T	86.8/15.4
R115	7030005600	S.RES ERJ2GEJ 273 X (27 k)	T	89.7/11.8
R116	7030007300	S.RES ERJ2GEJ 332 X (3.3 k)	T	88/14
R117	7030007300	S.RES ERJ2GEJ 332 X (3.3 k)	T	88/13.1
R118	7030007300	S.RES ERJ2GEJ 332 X (3.3 k)	B	86.3/26
R119	7030007300	S.RES ERJ2GEJ 332 X (3.3 k)	T	85.8/26.2
R120	7030005600	S.RES ERJ2GEJ 273 X (27 k)	B	83.6/25.4
R121	7030005090	S.RES ERJ2GEJ 104 X (100 k)	B	72.2/35
R122	7030005000	S.RES ERJ2GEJ 471 X (470)	B	75/36.6
R123	7030005100	S.RES ERJ2GEJ 154 X (150 k)	B	73.2/38.2
R124	7030005040	S.RES ERJ2GEJ 472 X (4.7 k)	B	74.1/38.2
R125	7030005240	S.RES ERJ2GEJ 473 X (47 k)	B	53.4/9.1
R126	7030005060	S.RES ERJ2GEJ 333 X (33 k)	B	35.7/8.9
R128	7030005160	S.RES ERJ2GEJ 105 X (1 M)	B	46.2/34.5
R130	7030007570	S.RES ERJ2GEJ 122 X (1.2 k)	B	61.3/36.8
R131	7030005090	S.RES ERJ2GEJ 104 X (100 k)	B	63.6/38.1
R132	7030005070	S.RES ERJ2GEJ 683 X (68 k)	B	62/38.1
R133	7030007300	S.RES ERJ2GEJ 332 X (3.3 k)	B	65.2/36.3
R134	7030007340	S.RES ERJ2GEJ 153 X (15 k)	B	64.1/34.5
R135	7030005050	S.RES ERJ2GEJ 103 X (10 k)	B	62.5/34.5
R136	7030005040	S.RES ERJ2GEJ 472 X (4.7 k)	B	60.9/34.5
R137	7030005220	S.RES ERJ2GEJ 223 X (22 k)	B	66.1/36.9
R138	7030005220	S.RES ERJ2GEJ 223 X (22 k)	B	66.8/38.1
R139	7030005220	S.RES ERJ2GEJ 223 X (22 k)	B	67.3/36.9
R140	7030011660	S.RES ERJ2RKF 1002 (10 k)	B	57.4/40.2
R141	7030011670	S.RES ERJ2RKF 3902 (39 k)	B	57.7/41.4
R142	7030011660	S.RES ERJ2RKF 1002 (10 k)	B	56.5/38.3
R143	7030011670	S.RES ERJ2RKF 3902 (39 k)	T	54.4/37.7
R144	7030005120	S.RES ERJ2GEJ 102 X (1 k)	B	45.8/38
R145	7030007300	S.RES ERJ2GEJ 332 X (3.3 k)	T	46.9/31.2
R146	7030010040	S.RES ERJ2GEJ-JPW	T	44.2/29.1
R147	7030005230	S.RES ERJ2GEJ 334 X (330 k)	T	55.6/39.3
R148	7030005060	S.RES ERJ2GEJ 333 X (33 k)	T	55.6/38.4
R149	7030005600	S.RES ERJ2GEJ 273 X (27 k)	T	56.2/37.2
R150	7030005000	S.RES ERJ2GEJ 471 X (470)	B	33.3/7.4
R151	7030005000	S.RES ERJ2GEJ 471 X (470)	T	45.9/19.2
R152	7030005160	S.RES ERJ2GEJ 105 X (1 M)	B	46.2/36.8
R153	7030005070	S.RES ERJ2GEJ 683 X (68 k)	T	45.7/35.8
R154	7030005090	S.RES ERJ2GEJ 104 X (100 k)	T	44.5/36.2
R155	7030005090	S.RES ERJ2GEJ 104 X (100 k)	B	45.3/4.4
R156	7030005210	S.RES ERJ2GEJ 822 X (8.2 k)	B	52.5/6.5
R157	7030005240	S.RES ERJ2GEJ 473 X (47 k)	B	54.3/9.7
R158	7030005060	S.RES ERJ2GEJ 333 X (33 k)	B	45/39.8
R159	7030005090	S.RES ERJ2GEJ 104 X (100 k)	B	45/38.9
R161	7030010040	S.RES ERJ2GEJ-JPW	B	38/29.3
R164	7030005230	S.RES ERJ2GEJ 334 X (330 k)	B	37.1/29.3
R165	7030005080	S.RES ERJ2GEJ 823 X (82 k)	B	38/30.9

[L]=Low band [H]=High band

[MAIN UNIT]

REF NO.	ORDER NO.	DESCRIPTION	M.	H/V LOCATION
R166	7030005040	S.RES ERJ2GEJ 472 X (4.7 k)	B	38.1/6.4
R167	7030005220	S.RES ERJ2GEJ 223 X (22 k)	B	36.5/5.5
R168	7030007290	S.RES ERJ2GEJ 222 X (2.2 k)	B	49.1/30.2
R169	7030011650	S.RES ERJ2GEJ 243X (24 k)	B	46.9/31.1
R170	7030005530	S.RES ERJ2GEJ 100 X (10)	T	53.2/25.8
R171	7030005160	S.RES ERJ2GEJ 105 X (1 M)	T	55.7/20.5
R173	7030005090	S.RES ERJ2GEJ 104 X (100 k)	B	60.4/31.8
R174	7030009140	S.RES ERJ2GEJ 272 X (2.7 k)	T	51.6/25.8
R175	7030009270	S.RES ERJ2GEJ 821 X (820)	T	52.1/27.4
R176	7030005090	S.RES ERJ2GEJ 104 X (100 k)	B	45.7/11.9
R177	7030005240	S.RES ERJ2GEJ 473 X (47 k)	B	53.4/10.7
R178	7030005070	S.RES ERJ2GEJ 683 X (68 k)	B	38.4/33.5
R179	7030005070	S.RES ERJ2GEJ 683 X (68 k)	T	40.5/29.6
R180	7030008300	S.RES ERJ2GEJ 184 X (180 k)	B	40.2/33.5
R181	7030011680	S.RES ERJ2RKF 2703 (270 k)	T	22/35.5
R182	7030010040	S.RES ERJ2GEJ-JPW	B	41.5/25.4
R183	7030007060	S.RES ERJ2GEJ 684X (680 k)	B	46.9/27.1
R184	7030009140	S.RES ERJ2GEJ 272 X (2.7 k)	B	47.8/28.3
R185	7030005230	S.RES ERJ2GEJ 334 X (330 k)	B	47.8/29.5
R186	7030007340	S.RES ERJ2GEJ 153 X (15 k)	B	48.3/25.5
R187	7030005050	S.RES ERJ2GEJ 103 X (10 k)	B	58.2/32.8
R188	7030005090	S.RES ERJ2GEJ 104 X (100 k)	B	61.5/30.5
R189	7030010040	S.RES ERJ2GEJ-JPW	B	97.2/21.9
R190	7030005700	S.RES ERJ2GEJ 274 X (270 k)	B	99.1/17.8
R191	7030005090	S.RES ERJ2GEJ 104 X (100 k)	T	97.3/18.4
R192	7030005050	S.RES ERJ2GEJ 103 X (10 k)	T	95.4/24.3
R193	7030004980	S.RES ERJ2GEJ 101 X (100)	B	98.8/20.9
R194	7030007290	S.RES ERJ2GEJ 222 X (2.2 k)	B	101.7/24.3
R195	7030005050	S.RES ERJ2GEJ 103 X (10 k)	B	95.4/24.2
R196	7030005040	S.RES ERJ2GEJ 472 X (4.7 k)	B	94.2/24.6
R197	7030005050	S.RES ERJ2GEJ 103 X (10 k)	B	96.1/19.6
R198	7030005040	S.RES ERJ2GEJ 472 X (4.7 k)	B	94.8/19.2
R199	7030005050	S.RES ERJ2GEJ 103 X (10 k)	T	97.5/12
R200	7030005040	S.RES ERJ2GEJ 472 X (4.7 k)	T	98.7/11.5
R201	7030005090	S.RES ERJ2GEJ 104 X (100 k)	B	61.6/11.4
R202	7030005110	S.RES ERJ2GEJ 224 X (220 k)	B	60.1/24.5
R203	7030005000	S.RES ERJ2GEJ 471 X (470)	B	61.8/29.3
R204	7030008310	S.RES ERJ2GEJ 564 X (560 k)	B	35.8/14.8
R205	7030005040	S.RES ERJ2GEJ 472 X (4.7 k)	B	60.2/27.9
R206	7030005040	S.RES ERJ2GEJ 472 X (4.7 k)	B	27.9/33.7
R207	7030005240	S.RES ERJ2GEJ 473 X (47 k)	B	32.5/36.2
R208	7030005240	S.RES ERJ2GEJ 473 X (47 k)	B	26.3/32.8
R209	7030005240	S.RES ERJ2GEJ 473 X (47 k)	B	24.5/33.7
R210	7030005240	S.RES ERJ2GEJ 473 X (47 k)	B	22.6/34.3
R211	7030005700	S.RES ERJ2GEJ 274 X (270 k)	T	26.3/35.5
R212	7030005070	S.RES ERJ2GEJ 683 X (68 k)	B	22.1/36.8
R213	7030005070	S.RES ERJ2GEJ 683 X (68 k)	B	21.5/38
R214	7030005070	S.RES ERJ2GEJ 683 X (68 k)	B	22.4/41.3
R215	7030005070	S.RES ERJ2GEJ 683 X (68 k)	B	20.9/40.5
R216	7030005070	S.RES ERJ2GEJ 683 X (68 k)	B	20.6/38
R217	7030005080	S.RES ERJ2GEJ 823 X (82 k)	B	41.5/26.3
R219	7030004980	S.RES ERJ2GEJ 101 X (100)	T	18.2/29.2
R220	7030005720	S.RES ERJ2GEJ 563 X (56 k)	B	39.9/26.3
R221	7410001130	S.ARY EXB28V102JX	B	32/18.4
R222	7410001130	S.ARY EXB28V102JX	T	30.2/20.4
R223	7410001130	S.ARY EXB28V102JX	B	30.2/16.6
R225	7410001130	S.ARY EXB28V102JX	B	28.1/14.5
R226	7410001130	S.ARY EXB28V102JX	B	26.3/12.6
R227	7410001130	S.ARY EXB28V102JX	T	21.3/15.6
R228	7030005000	S.RES ERJ2GEJ 471 X (470)	T	104/35.2
R229	7030005050	S.RES ERJ2GEJ 103 X (10 k)	B	30.7/8.7
R230	7030005090	S.RES ERJ2GEJ 104 X (100 k)	B	30.7/7.5
R231	7030005050	S.RES ERJ2GEJ 103 X (10 k)	T	98.9/39.1
R232	7030005090	S.RES ERJ2GEJ 104 X (100 k)	T	15.1/26.5
R233	7410001140	S.ARY EXB28V104JX	T	22.2/21.2
R234	7030005050	S.RES ERJ2GEJ 103 X (10 k)	T	16/26.5
R235	7410001130	S.ARY EXB28V102JX	B	16.7/15.5
R236	7410001140	S.ARY EXB28V104JX	T	24.1/19.5
R238	7030004980	S.RES ERJ2GEJ 101 X (100)	B	12.7/21.7
R240	7030005090	S.RES ERJ2GEJ 104 X (100 k)	T	37.5/24.8
R242	7410001130	S.ARY EXB28V102JX	B	34.5/20.1
R243	7030005530	S.RES ERJ2GEJ 100 X (10)	T	7.7/28.7
R244	7030005160	S.RES ERJ2GEJ 105 X (1 M)	T	6.5/29.1
R245	7030008010	S.RES ERJ2GEJ 123 X (12 k)	B	16.2/32.3
R246	7030008010	S.RES ERJ2GEJ 123 X (12 k)	B	12.4/32.8
R247	7030008010	S.RES ERJ2GEJ 123 X (12 k)	B	11.1/28.5
R248	7030005120	S.RES ERJ2GEJ 102 X (1 k)	T	22.6/26.9
R249	7030005090	S.RES ERJ2GEJ 104 X (100 k)	T	21.4/24.4
R250	7030005090	S.RES ERJ2GEJ 104 X (100 k)	T	43.8/13.8
R251	7030005050	S.RES ERJ2GEJ 103 X (10 k)	T	27.6/33.2
R252	7030005050	S.RES ERJ2GEJ 103 X (10 k)	T	27.6/32.3
R253	7410001140	S.ARY EXB28V104JX	T	29.4/28
R255	7410001130	S.ARY EXB28V102JX	T	25.8/29.5
R257	7410001130	S.ARY EXB28V102JX	B	31.3/28.6
R258	7410001140	S.ARY EXB28V104JX	T	31.5/29.3
R259	7410001130	S.ARY EXB28V102JX	B	33.1/26.8
R260	7030010040	S.RES ERJ2GEJ-JPW	B	29.2/36.7
R261	7030005220	S.RES ERJ2GEJ 223 X (22 k)	T	26.3/34.6
R262	7030005050	S.RES ERJ2GEJ 103 X (10 k)	T	23.6/33.9
R263	7030008300	S.RES ERJ2GEJ 184 X (180 k)	T	25.7/23.6
R264	7030005720	S.RES ERJ2GEJ 563 X (56 k)	T	25.7/24.6
R265	7030005220	S.RES ERJ2GEJ 223 X (22 k)	T	25.7/25.6
R266	7030005120	S.RES ERJ2GEJ 102 X (1 k)	T	22.3/34.3

M.=Mounted side (T: Mounted on the Top side, B: Mounted on the Bottom side)
S.=Surface mount

[MAIN UNIT]

REF NO.	ORDER NO.	DESCRIPTION	M.	H/V LOCATION
R267	7030005050	S.RES ERJ2GEJ 103 X (10 k)	B	12.9/18.6
R268	7030005050	S.RES ERJ2GEJ 103 X (10 k)	T	12.3/21.2
R269	7030005290	S.RES ERJ2GEJ 682 X (6.8 k)	T	23.2/36.1
R272	7030004970	S.RES ERJ2GEJ 470 X (47)	B	90.4/7.1
R273	7030005090	S.RES ERJ2GEJ 104 X (100 k)	B	95.4/8.9
R274	7030005120	S.RES ERJ2GEJ 102 X (1 k)	T	93/6.2
R275	7030004980	S.RES ERJ2GEJ 101 X (100)	T	95.9/7.5
R276	7030005090	S.RES ERJ2GEJ 104 X (100 k)	B	8.4/22.2
R277	7030005090	S.RES ERJ2GEJ 104 X (100 k)	B	9.3/22.2
R279	7030005090	S.RES ERJ2GEJ 104 X (100 k)	B	24.3/11.8
R280	7510001730	S.TMR ERTJOEP 473J	B	57.1/7.3
R281	7030010080	S.RES ERJ2RHD 104 X (100 k)	B	56.2/5.4
R282	7030005110	S.RES ERJ2GEJ 224 X (220 k)	T	68.1/25.2
R283	7030005090	S.RES ERJ2GEJ 104 X (100 k)	B	35.8/16.9
R284	7030008290	S.RES ERJ2GEJ 183 X (18 k)	B	66.2/26
R285	7030005070	S.RES ERJ2GEJ 683 X (68 k)	B	66.5/27.2
R286	7030005090	S.RES ERJ2GEJ 104 X (100 k)	B	64/27.4
R287	7030005090	S.RES ERJ2GEJ 104 X (100 k)	T	28.6/40.9
R288	7030005720	S.RES ERJ2GEJ 563 X (56 k)	B	29.8/39
R289	7030005310	S.RES ERJ2GEJ 124 X (120 k)	B	30.1/41.4
R290	7030005240	S.RES ERJ2GEJ 473 X (47 k)	B	28.9/40.9
R291	7030005000	S.RES ERJ2GEJ 471 X (470)	B	41.8/23.9
R292	7030005240	S.RES ERJ2GEJ 473 X (47 k)	T	39.2/19.3
R293	7030005700	S.RES ERJ2GEJ 274 X (270 k)	T	38.3/19.3
R294	7030005310	S.RES ERJ2GEJ 124 X (120 k)	B	94.4/8.9
R295	7030005310	S.RES ERJ2GEJ 124 X (120 k)	B	95.5/10.1
R296	7030005090	S.RES ERJ2GEJ 104 X (100 k)	B	95.5/11.9
R297	7030007340	S.RES ERJ2GEJ 153 X (15 k)	B	95.5/11
R298	7030005160	S.RES ERJ2GEJ 105 X (1 M)	T	46.1/24.3
R301	7030005090	S.RES ERJ2GEJ 104 X (100 k)	T	104.6/36.8
R302	7030010040	S.RES ERJ2GEJ-JPW	B	56.5/40.2
R303	7030010040	S.RES ERJ2GEJ-JPW	B	45.3/36.8
R304	7030005050	S.RES ERJ2GEJ 103 X (10 k)	B	78.3/36.6
R305	7030007300	S.RES ERJ2GEJ 332 X (3.3 k)	B	80.6/37.9
R306	7030005090	S.RES ERJ2GEJ 104 X (100 k)	B	19.2/10.1
R307	7030005090	S.RES ERJ2GEJ 104 X (100 k)	B	9.4/8.7
R308	7030005090	S.RES ERJ2GEJ 104 X (100 k)	T	37.5/26.3
R309	7030005090	S.RES ERJ2GEJ 104 X (100 k)	B	33.7/14.4
R310	7030005090	S.RES ERJ2GEJ 104 X (100 k)	B	32.4/15.3
R312	7030005090	S.RES ERJ2GEJ 104 X (100 k)	T	45/13.4
R313	7030007340	S.RES ERJ2GEJ 153 X (15 k)	T	6.8/33.9
R314	7030007340	S.RES ERJ2GEJ 153 X (15 k)	T	9/31.8
R315	7030007340	S.RES ERJ2GEJ 153 X (15 k)	T	10.5/31.8
R316	7030005160	S.RES ERJ2GEJ 105 X (1 M)	B	6.5/38.2
R317	7030005160	S.RES ERJ2GEJ 105 X (1 M)	B	12.2/12.5
R318	7030005160	S.RES ERJ2GEJ 105 X (1 M)	B	5.3/35.9
R319	7030005090	S.RES ERJ2GEJ 104 X (100 k)	B	11.9/17.2
R320	7030005090	S.RES ERJ2GEJ 104 X (100 k)	B	9.4/9.6
R328	7510001730	S.TMR ERTJOEP 473J	T	55.3/37.2
R329	7030005060	S.RES ERJ2GEJ 333 X (33 k)	T	55.6/36
R330	7030005290	S.RES ERJ2GEJ 682 X (6.8 k)	T	55.8/34.8
R331	7030007340	S.RES ERJ2GEJ 153 X (15 k)	T	47.1/16.5
R332	7030005010	S.RES ERJ2GEJ 681 X (680)	B	52.5/27.1
R333	7030005090	S.RES ERJ2GEJ 104 X (100 k)	T	17.1/31.8
R335	7030005090	S.RES ERJ2GEJ 104 X (100 k)	T	58.3/8
R336	7030005090	S.RES ERJ2GEJ 104 X (100 k)	B	34.4/4.7
R337	7030007340	S.RES ERJ2GEJ 153 X (15 k)	B	52.1/28.4
R338	7030007340	S.RES ERJ2GEJ 153 X (15 k)	B	51.6/27.1
R339	7030003860	S.RES ERJ3GE JPW V	B	65.1/12.5
R340	7030005000	S.RES ERJ2GEJ 471 X (470)	B	88.6/9.6
R341	7030005530	S.RES ERJ2GEJ 100 X (10)	B	88.8/10.8
R342	7030005000	S.RES ERJ2GEJ 471 X (470)	B	90/10.1
R343	7030005120	S.RES ERJ2GEJ 102 X (1 k)	B	62.7/21.8
C1	4030017420	S.CER ECJ0EC1H470J	B	51.8/29.6
C2	4030017620	S.CER ECJ0EC1H100C	T	57.9/24
C3	4030017430	S.CER ECJ0EC1H101J	T	57.9/20.8
C4	4030016930	S.CER ECJ0EB1A104K	B	55.1/23.2
C5	4030016930	S.CER ECJ0EB1A104K	B	52.8/20.7
C7	4030017460	S.CER ECJ0EB1E102K	B	53.7/20.7
C8	4030017650	S.CER ECJ0EC1H270J	B	62.7/20
C9	4030017420	S.CER ECJ0EC1H470J	B	62.7/17.5
C10	4030016930	S.CER ECJ0EB1A104K	B	52.8/13.7
C11	4030017420	S.CER ECJ0EC1H470J	B	51.4/14.3
C12	4030017420	S.CER ECJ0EC1H470J	B	49.9/16.6
C13	4030017420	S.CER ECJ0EC1H470J	B	51.3/17
C14	4030006900	S.CER C1608 JB 1H 103K-T	B	65.4/19.6
C16	4550000550	S.TAN TEESVA 1V 224M8R	B	67.4/24.4
C17	4030017460	S.CER ECJ0EB1E102K	B	63/14.7
C18	4030017460	S.CER ECJ0EB1E102K	B	66.9/13.7
C19	4550000510	S.TAN TEESVA 1V 473M8R	B	67.4/22.3
C21	4030017420	S.CER ECJ0EC1H470J	B	64/8.5
C22	4030017420	S.CER ECJ0EC1H470J	T	63.6/13.6
C23	4030017460	S.CER ECJ0EB1E102K	B	66.9/18.6
C24	4030017580	S.CER ECJ0EC1H060C [H]	T	66.2/10.8
C24	4030017590	S.CER ECJ0EC1H070C [L]	T	66.2/10.8
C25	4030017590	S.CER ECJ0EC1H070C [H]	T	67.3/9.8
C25	4030017620	S.CER ECJ0EC1H100C [L]	T	67.3/9.8
C26	4030017350	S.CER ECJ0EC1H020B [H]	T	67.7/8.6
C26	4030017570	S.CER ECJ0EC1H040B [L]	T	67.7/8.6
C27	4030017630	S.CER ECJ0EC1H120J	T	70.4/10.8
C28	4030017360	S.CER ECJ0EC1H030B [H]	T	71.3/9.8

[L]=Low band [H]=High band

[MAIN UNIT]

REF NO.	ORDER NO.	DESCRIPTION	M.	H/V LOCATION
C28	4030017380	S.CER ECJ0EC1H050B [L]	T	71.3/9.8
C29	4030017570	S.CER ECJ0EC1H040B [H]	T	72.1/8.6
C29	4030017600	S.CER ECJ0EC1H080C [L]	T	72.1/8.6
C30	4030016930	S.CER ECJ0EB1A104K	T	73.4/13.4
C31	4030017460	S.CER ECJ0EB1E102K	T	71.4/13.4
C32	4030017460	S.CER ECJ0EB1E102K	T	71.4/19.9
C33	4030016930	S.CER ECJ0EB1A104K	T	73.4/19.9
C34	4030017640	S.CER ECJ0EC1H150J	T	70.4/17.3
C35	4030017570	S.CER ECJ0EC1H040B [H]	T	71.3/16.3
C35	4030017600	S.CER ECJ0EC1H080C [L]	T	71.3/16.3
C36	4030017590	S.CER ECJ0EC1H070C [H]	T	71.7/15.1
C36	4030017630	S.CER ECJ0EC1H120J [L]	T	71.7/15.1
C37	4030017360	S.CER ECJ0EC1H030B [H]	T	67.7/15.1
C37	4030017380	S.CER ECJ0EC1H050B [L]	T	67.7/15.1
C38	4030017610	S.CER ECJ0EC1H090C [H]	T	67.3/16.3
C38	4030017630	S.CER ECJ0EC1H120J [L]	T	67.3/16.3
C39	4030017390	S.CER ECJ0EC1H180J [L]	T	66.2/17.3
C39	4030017580	S.CER ECJ0EC1H060C [H]	T	66.2/17.3
C39	4030017630	S.CER ECJ0EC1H120J	T	66.2/17.3
C40	4030016930	S.CER ECJ0EB1A104K	T	74.5/26.1
C41	4030017460	S.CER ECJ0EB1E102K	B	72.3/26.6
C42	4030017640	S.CER ECJ0EC1H150J	T	70.4/23.7
C43	4030017580	S.CER ECJ0EC1H060C	T	71.2/22.7
C44	4030017610	S.CER ECJ0EC1H090C	T	71.7/21.5
C45	4030017560	S.CER ECJ0EC1H2R5B	T	67.7/21.5
C46	4030017340	S.CER ECJ0EC1H010B	T	69.9/25.2
C47	4030017340	S.CER ECJ0EC1H010B	T	69.5/26.4
C48	4030017620	S.CER ECJ0EC1H100C [H]	T	67.3/22.7
C48	4030017650	S.CER ECJ0EC1H270J [L]	T	67.3/22.7
C49	4030017660	S.CER ECJ0EC1H330J	T	66/23.7
C50	4030017420	S.CER ECJ0EC1H470J	B	66/20.7
C51	4030017420	S.CER ECJ0EC1H470J	B	67.4/27
C52	4030016930	S.CER ECJ0EB1A104K	B	65.6/27.2
C53	4030017530	S.CER ECJ0EC1H0R5B	T	74.2/11.3
C54	4030017530	S.CER ECJ0EC1H0R5B	T	74.4/17.3
C55	4030017530	S.CER ECJ0EC1H0R5B	T	74.4/19.9
C56	4030017460	S.CER ECJ0EB1E102K	B	73.7/20.2
C57	4030017460	S.CER ECJ0EB1E102K	B	67.7/12.6
C58	4550006250	S.TAN TEESVA 1A 106M8R	B	79.6/18.6
C59	4030016790	S.CER ECJ0EB1C103K	B	81.1/23.2
C60	4030017460	S.CER ECJ0EB1E102K	T	77.7/18.2
C61	4030017730	S.CER ECJ0EB1E471K	T	76.2/20.6
C62	4030017580	S.CER ECJ0EC1H060C	T	80/18
C63	4030017460	S.CER ECJ0EB1E102K	T	81.3/21.6
C65	4030017460	S.CER ECJ0EB1E102K	T	80/24.4
C66	4030017380	S.CER ECJ0EC1H050B	T	77.6/14
C67	4030017460	S.CER ECJ0EB1E102K	T	79.9/13.5
C68	4030017460	S.CER ECJ0EB1E102K	T	81.1/15.5
C69	4030017620	S.CER ECJ0EC1H100C	B	82.7/13.3
C71	4030017460	S.CER ECJ0EB1E102K	B	85.9/16.3
C73	4030017380	S.CER ECJ0EC1H050B	B	88.1/13.5
C75	4030017570	S.CER ECJ0EC1H040B	B	91.7/18
C76	4030017420	S.CER ECJ0EC1H470J	B	89.7/17
C77	4030017460	S.CER ECJ0EB1E102K	B	88.8/16.2
C78	4030017460	S.CER ECJ0EB1E102K	B	86.8/18.5
C79	4030017380	S.CER ECJ0EC1H050B	B	93.5/17.3
C100	4030017420	S.CER ECJ0EC1H470J	T	48.5/18.7
C101	4030017420	S.CER ECJ0EC1H470J	T	57.9/14.6
C113	4030017730	S.CER ECJ0EB1E471K	T	56.6/7.1
C118	4030017460	S.CER ECJ0EB1E102K	T	105.5/26.9
C119	4030017510	S.CER ECJ0EC1H680J	B	105.9/27.4
C120	4030017590	S.CER ECJ0EC1H070C	B	106/24.2
C121	4030017590	S.CER ECJ0EC1H070C [H]	B	104.8/23.8
C121	4030017600	S.CER ECJ0EC1H080C [L]	B	104.8/23.8
C122	4030017400	S.CER ECJ0EC1H220J	B	103.2/20.8
C123	4030017460	S.CER ECJ0EB1E102K	B	100/19.9
C124	4030017460	S.CER ECJ0EB1E102K	T	103.1/21.1
C125	4030017560	S.CER ECJ0EC1H2R5B	B	106.1/20.5
C126	4030017400	S.CER ECJ0EC1H220J	B	103.2/17.2
C127	4030017590	S.CER ECJ0EC1H070C [H]	B	104.8/20.2
C127	4030017600	S.CER ECJ0EC1H080C [L]	B	104.8/20.2
C128	4030017590	S.CER ECJ0EC1H070C	B	105.3/16.9
C129	4030017460	S.CER ECJ0EB1E102K	B	103/13.8
C130	4030017420	S.CER ECJ0EC1H470J	B	103/14.7
C131	4030017420	S.CER ECJ0EC1H470J	B	104.9/11.4
C132	4030017460	S.CER ECJ0EB1E102K	T	104.7/11.4
C133	4030017460	S.CER ECJ0EB1E102K	T	100.6/8.1
C134	4030016930	S.CER ECJ0EB1A104K	T	104/13.6
C135	4030016930	S.CER ECJ0EB1A104K	T	104.3/14.8
C136	4030017460	S.CER ECJ0EB1E102K	T	102.8/11
C137	4030017420	S.CER ECJ0EC1H470J	B	105.3/9.5
C138	4030017460	S.CER ECJ0EB1E102K	B	105.7/8.3
C139	4030017460	S.CER ECJ0EB1E102K	B	100.3/7.3
C141	4030017350	S.CER ECJ0EC1H020B [L]	B	103/12.9
C141	4030017550	S.CER ECJ0EC1H1R5B [H]	B	103/12.9
C142	4030017630	S.CER ECJ0EC1H120J	B	103/11.3
C143	4030017620	S.CER ECJ0EC1H100C [H]	B	99.3/8.9
C143	4030017630	S.CER ECJ0EC1H120J [L]	B	99.3/8.9
C144	4030017520	S.CER ECJ0EC1H0R3B	B	100.7/8.4
C145	4030017460	S.CER ECJ0EB1E102K	B	99.6/11.3
C146	4030017460	S.CER ECJ0EB1E102K	T	100.9/11.7
C147	4030017340	S.CER ECJ0EC1H010B	B	96.3/8.9
C148	4030017380	S.CER ECJ0EC1H050B	B	96/7.7
C151	4030017550	S.CER ECJ0EC1H1R5B	T	79/21.4

M.=Mounted side (T: Mounted on the Top side, B: Mounted on the Bottom side)
S.=Surface mount

[MAIN UNIT]

REF NO.	ORDER NO.	DESCRIPTION	M.	H/V LOCATION
C152	4030017340	S.CER ECJ0EC1H010B	T	79.1/24
C153	4030017460	S.CER ECJ0EB1E102K	B	75.7/24.6
C154	4030017340	S.CER ECJ0EC1H010B	T	78.2/24
C156	4030017350	S.CER ECJ0EC1H020B	T	76/25.1
C157	4030017460	S.CER ECJ0EB1E102K	B	63.7/17.6
C159	4030017420	S.CER ECJ0EC1H470J	B	92.1/11.1
C160	4030017460	S.CER ECJ0EB1E102K	B	92.1/12
C161	4030017380	S.CER ECJ0EC1H050B	B	92.1/10.2
C164	4030017360	S.CER ECJ0EC1H030B [H]	B	87.5/11.2
C164	4030017580	S.CER ECJ0EC1H060C [L]	B	87.5/11.2
C164	4030017620	S.CER ECJ0EC1H100C	B	87.5/11.2
C166	4030017460	S.CER ECJ0EB1E102K	B	89.3/12
C173	4030016790	S.CER ECJ0EB1C103K	T	85.8/16.6
C174	4030016790	S.CER ECJ0EB1C103K	T	85.5/23
C177	4030017640	S.CER ECJ0EC1H150J	B	86.5/22
C180	4030017460	S.CER ECJ0EB1E102K	B	78.4/26.9
C181	4030016790	S.CER ECJ0EB1C103K	B	79.6/26.1
C182	4030016790	S.CER ECJ0EB1C103K	B	75.6/27.8
C183	4030016790	S.CER ECJ0EB1C103K	B	81.4/30.1
C184	4030017460	S.CER ECJ0EB1E102K	B	81.5/31.6
C185	4550005980	S.TAN TEESVA 1A 475M8R	B	85.6/34.9
C186	4030017420	S.CER ECJ0EC1H470J	B	81.5/32.5
C187	4030017680	S.CER ECJ0EC1H820J	B	81.5/34.3
C188	4030017460	S.CER ECJ0EB1E102K	B	75.5/29.6
C189	4030016930	S.CER ECJ0EB1A104K	B	71.8/33.2
C191	4030016930	S.CER ECJ0EB1A104K	T	69.3/39.9
C192	4030016930	S.CER ECJ0EB1A104K	B	71.9/31.6
C193	4030016930	S.CER ECJ0EB1A104K	T	72.5/39.9
C194	4030016930	S.CER ECJ0EB1A104K	T	71.7/32.2
C195	4030016930	S.CER ECJ0EB1A104K	T	72.3/35.8
C196	4030017360	S.CER ECJ0EC1H030B	B	73.9/29.6
C197	4030017590	S.CER ECJ0EC1H070C	B	71.3/29.4
C198	4030017570	S.CER ECJ0EC1H040B	B	70.1/29.9
C199	4030017500	S.CER ECJ0EC1H560J	B	70.1/29
C200	4030016790	S.CER ECJ0EB1C103K	B	66.6/31.4
C201	4030017620	S.CER ECJ0EC1H100C	T	59.7/20.8
C202	4030016930	S.CER ECJ0EB1A104K	B	75.9/36.6
C203	4030017460	S.CER ECJ0EB1E102K	B	81.5/33.4
C204	4030017460	S.CER ECJ0EB1E102K	B	81.5/36.3
C205	4030016930	S.CER ECJ0EB1A104K	B	47.6/14.7
C206	4030016790	S.CER ECJ0EB1C103K	T	90.2/15.4
C207	4030016790	S.CER ECJ0EB1C103K	T	89.3/15.4
C208	4030016790	S.CER ECJ0EB1C103K	T	89.7/10.2
C210	4030017390	S.CER ECJ0EC1H180J	T	86.5/22.1
C212	4030016790	S.CER ECJ0EB1C103K	B	86.7/27.2
C213	4030016790	S.CER ECJ0EB1C103K	T	85.8/27.1
C215	4030016790	S.CER ECJ0EB1C103K	B	82.4/26.2
C216	4030017730	S.CER ECJ0EB1E471K	B	74.1/36.6
C217	4030017730	S.CER ECJ0EB1E471K	B	73.2/36.6
C218	4030017460	S.CER ECJ0EB1E102K	B	72.3/38.2
C219	4030017710	S.CER ECJ0EC1H181J	B	37.1/30.9
C220	4030017400	S.CER ECJ0EC1H220J	T	52.6/29.2
C221	4030017400	S.CER ECJ0EC1H220J	T	52.6/42.1
C222	4030016970	S.CER ECJ0EB1C223K	B	62.5/33.6
C223	4030016930	S.CER ECJ0EB1A104K	B	65.2/38.1
C224	4030017790	S.CER ECJ0EB1E682K	B	66.1/35.3
C225	4030016940	S.CER ECJ0EB1A393K	B	68.4/38.1
C226	4550006250	S.TAN TEESVA 1A 106M8R	B	41.5/39.2
C227	4030017460	S.CER ECJ0EB1E102K	B	44.4/36.8
C228	4550000460	S.TAN TEESVA 1C 105M8R	T	57.8/40.9
C229	4550000460	S.TAN TEESVA 1C 105M8R	B	60.4/39.7
C230	4030017460	S.CER ECJ0EB1E102K	B	56.1/41.4
C231	4030017420	S.CER ECJ0EC1H470J	T	57.7/33.5
C232	4030017420	S.CER ECJ0EC1H470J	T	56.7/33.5
C233	4030017420	S.CER ECJ0EC1H470J	T	58.6/36.4
C234	4030017420	S.CER ECJ0EC1H470J	T	57.4/36.8
C235	4030017420	S.CER ECJ0EC1H470J	B	44.6/34.8
C236	4030017420	S.CER ECJ0EC1H470J	B	43.7/34.8
C237	4030016970	S.CER ECJ0EB1C223K	T	42.7/40.3
C238	4030016930	S.CER ECJ0EB1A104K	T	46.9/32.1
C239	4030017420	S.CER ECJ0EC1H470J	T	43.3/29.1
C240	4030017420	S.CER ECJ0EC1H470J	T	54.4/39.3
C241	4030017750	S.CER ECJ0EB1E122K	T	57.4/37.7
C242	4030016930	S.CER ECJ0EB1A104K	T	55.8/33.2
C243	4030016930	S.CER ECJ0EB1A104K	T	45.7/36.7
C244	4030017440	S.CER ECJ0EC1H221J	B	45.3/5.3
C245	4030018080	S.CER ECJ0EB1H182K	B	45.3/6.2
C246	4030016930	S.CER ECJ0EB1A104K	B	45.1/10.7
C247	4030016930	S.CER ECJ0EB1A104K	B	52.5/10.7
C248	4030017710	S.CER ECJ0EC1H181J	B	46.2/39.2
C249	4030016930	S.CER ECJ0EB1A104K	B	50.6/30.8
C250	4030017460	S.CER ECJ0EB1E102K	B	54.3/8.1
C250	4030017740	S.CER ECJ0EB1E821K	B	54.3/8.1
C251	4030016930	S.CER ECJ0EB1A104K	B	41.4/33.1
C252	4030016930	S.CER ECJ0EB1A104K	B	34.2/8.9
C253	4030016930	S.CER ECJ0EB1A104K	B	42.7/23.9
C254	4030016930	S.CER ECJ0EB1A104K	T	42.9/13.2
C255	4030016790	S.CER ECJ0EB1C103K	B	36.5/6.4
C256	4030017760	S.CER ECJ0EB1H222K	B	36.5/4.6
C257	4030016930	S.CER ECJ0EB1A104K	B	45.1/7.4
C258	4030017730	S.CER ECJ0EB1E471K	B	47.8/31.1
C259	4550006250	S.TAN TEESVA 1A 106M8R	T	54/24.2

[L]=Low band [H]=High band

[MAIN UNIT]

REF NO.	ORDER NO.	DESCRIPTION	M.	H/V LOCATION
C260	4550006250	S.TAN TEESVA 1A 106M8R	T	54/22.1
C261	4030018860	S.CER ECJ0EB0J105K	T	46.9/23.1
C262	4030016790	S.CER ECJ0EB1C103K	T	43.9/24
C264	4030017460	S.CER ECJ0EB1E102K	B	36.6/8.9
C266	4030017780	S.CER ECJ0EB1E472K	B	53.7/6.8
C267	4030017730	S.CER ECJ0EB1E471K	B	46.9/29.5
C268	4030016960	S.CER ECJ0EB1C183K	B	47.8/27.1
C269	4030016960	S.CER ECJ0EB1C183K	B	47.7/24
C271	4030016930	S.CER ECJ0EB1A104K	B	51/31.7
C272	4030016930	S.CER ECJ0EB1A104K	T	7.3/15.9
C273	4030017460	S.CER ECJ0EB1E102K	T	10.7/10.5
C274	4030016930	S.CER ECJ0EB1A104K	T	40.5/31.2
C275	4030016930	S.CER ECJ0EB1A104K	B	39.3/33.5
C276	4030017460	S.CER ECJ0EB1E102K	B	97.8/18
C277	4550007080	S.TAN TEESVA 1C 106M8R	T	95.1/19.8
C278	4030017460	S.CER ECJ0EB1E102K	T	97.3/19.3
C279	4030016790	S.CER ECJ0EB1C103K	T	105/16.4
C280	4030016930	S.CER ECJ0EB1A104K	B	98.8/19.6
C281	4030016790	S.CER ECJ0EB1C103K	B	97.9/19.6
C282	4550005980	S.TAN TEESVA 1A 475M8R	T	104/22.7
C283	4030017460	S.CER ECJ0EB1E102K	B	102.2/25.4
C284	4030016790	S.CER ECJ0EB1C103K	B	94.2/25.5
C285	4030017460	S.CER ECJ0EB1E102K	T	94.5/23.7
C286	4030017460	S.CER ECJ0EB1E102K	T	93.5/21.7
C287	4030016790	S.CER ECJ0EB1C103K	B	93.6/19.4
C288	4030017460	S.CER ECJ0EB1E102K	B	97/19.6
C289	4030017460	S.CER ECJ0EB1E102K	T	92.1/12.5
C290	4030016790	S.CER ECJ0EB1C103K	T	98.3/10.3
C291	4030017460	S.CER ECJ0EB1E102K	T	91.8/11.3
C292	4030017460	S.CER ECJ0EB1E102K	B	96.9/18
C294	4030016930	S.CER ECJ0EB1A104K	B	66.2/15.4
C295	4030016930	S.CER ECJ0EB1A104K	B	61/25.4
C296	4030017460	S.CER ECJ0EB1E102K	B	62.2/25.5
C297	4030017460	S.CER ECJ0EB1E102K	B	62.4/30.5
C298	4030017460	S.CER ECJ0EB1E102K	T	58.6/27.8
C299	4030016930	S.CER ECJ0EB1A104K	B	32.5/35.3
C300	4030017420	S.CER ECJ0EC1H470J	B	32/37.4
C301	4030017750	S.CER ECJ0EB1E122K	B	27.2/31.9
C302	4030016930	S.CER ECJ0EB1A104K	B	26.3/33.7
C303	4030016960	S.CER ECJ0EB1C183K	B	22.7/33.4
C304	4030016930	S.CER ECJ0EB1A104K	T	27.9/35.5
C305	4030017420	S.CER ECJ0EC1H470J	T	25.1/34.7
C306	4030017430	S.CER ECJ0EC1H101J	B	22.4/38
C307	4030017910	S.CER ECJ0EB1H152K	B	22.1/35.9
C308	4030017420	S.CER ECJ0EC1H470J	B	22.1/39.2
C309	4030017690	S.CER ECJ0EC1H121J	B	21.2/41.7
C310	4030017760	S.CER ECJ0EB1H222K	B	22.1/40.1
C311	4030017460	S.CER ECJ0EB1E102K	B	19.7/40.5
C312	4030016930	S.CER ECJ0EB1A104K	T	23.9/35.2
C313	4030016930	S.CER ECJ0EB1A104K	B	39.9/25.4
C314	4030017460	S.CER ECJ0EB1E102K	T	18.8/40.6
C315	4030018560	S.CER C2012 JB 1A 475K-T	B	30.4/33.8
C316	4030016930	S.CER ECJ0EB1A104K	T	26.3/21.4
C317	4030016930	S.CER ECJ0EB1A104K	B	30.3/5.3
C318	4030016930	S.CER ECJ0EB1A104K	T	102.8/35.6
C319	4550006780	S.TAN TEESVB2 0J 476M8R	T	94.9/35.3
C320	4030017420	S.CER ECJ0EC1H470J	T	25/17.3
C321	4030017420	S.CER ECJ0EC1H470J	T	23.6/16.1
C322	4030016930	S.CER ECJ0EB1A104K	B	12.7/22.6
C323	4030016930	S.CER ECJ0EB1A104K	B	12.7/20.8
C324	4030016930	S.CER ECJ0EB1A104K	B	10.2/22.2
C325	4030016930	S.CER ECJ0EB1A104K	B	13.2/27.7
C326	4030017030	S.CER ECJ0EB1A273K	T	15.3/30.9
C328	4030017420	S.CER ECJ0EC1H470J	T	37.4/20.5
C329	4030017580	S.CER ECJ0EC1H060C	T	4.7/39
C330	4030017630	S.CER ECJ0EC1H120J	T	4.7/25.8
C331	4030017640	S.CER ECJ0EC1H150J	B	11.1/29.7
C332	4030017420	S.CER ECJ0EC1H470J	T	21.4/25.9
C333	4030017420	S.CER ECJ0EC1H470J	T	25.5/33.1
C336	4030017420	S.CER ECJ0EC1H470J	T	34.1/31.5
C339	4030017420	S.CER ECJ0EC1H470J	B	37.6/26.3
C340	4030017420	S.CER ECJ0EC1H470J	T	34.7/30
C341	4030017460	S.CER ECJ0EB1E102K	T	27.9/34.6
C342	4030016930	S.CER ECJ0EB1A104K	B	14.5/18.6
C343	4030016930	S.CER ECJ0EB1A104K	T	12.3/23
C344	4030017420	S.CER ECJ0EC1H470J	B	90.4/8.9
C345	4030017460	S.CER ECJ0EB1E102K	B	90.4/8
C346	4030017670	S.CER ECJ0EC1H390J	T	93/10.5
C347	4030016790	S.CER ECJ0EB1C103K	T	94.6/6.2
C348	4030017460	S.CER ECJ0EB1E102K	T	95.9/9.2
C349	4030017460	S.CER ECJ0EB1E102K	T	97.1/7
C352	4550006250	S.TAN TEESVA 1A 106M8R	B	35.5/32.3
C353	4030016930	S.CER ECJ0EB1A104K	B	12.2/11.6
C354	4030017420	S.CER ECJ0EC1H470J	T	29.8/22.3
C355	4030017420	S.CER ECJ0EC1H470J	T	21.8/17.9
C358	4030017420	S.CER ECJ0EC1H470J	B	32.1/9.2
C359	4030017420	S.CER ECJ0EC1H470J	T	33.6/12.3
C360	4030017420	S.CER ECJ0EC1H470J	T	93.5/17.5
C361	4030017420	S.CER ECJ0EC1H470J	T	31.3/15.3
C362	4030017420	S.CER ECJ0EC1H470J	T	31.9/23.3
C363	4030017420	S.CER ECJ0EC1H470J	T	30/12
C364	4030017420	S.CER ECJ0EC1H470J	T	29/12
C365	4030016930	S.CER ECJ0EB1A104K	B	54.4/5.9
C366	4030017030	S.CER ECJ0EB1A273K	B	35.8/16

M.=Mounted side (T: Mounted on the Top side, B: Mounted on the Bottom side)
S.=Surface mount

[MAIN UNIT]

REF NO.	ORDER NO.	DESCRIPTION	M.	H/V LOCATION
C367	4030016930	S.CER ECJ0EB1A104K	B	39.7/39.4
C368	4030016930	S.CER ECJ0EB1A104K	B	43.1/26.3
C369	4030016930	S.CER ECJ0EB1A104K	B	28.9/39
C370	4030016930	S.CER ECJ0EB1A104K	B	68.8/36.9
C371	4030016930	S.CER ECJ0EB1A104K	T	57.8/30.6
C372	4030016930	S.CER ECJ0EB1A104K	B	29.2/37.6
C373	4030011600	S.CER C1608 JB 1E 104K-T	T	103.3/16.6
C374	4030017490	S.CER C1608 JB 1A 105K-T	T	105.6/19.3
C376	4030016790	S.CER ECJ0EB1C103K	B	14.4/34.2
C378	4030016930	S.CER ECJ0EB1A104K	B	8.1/25.6
C381	4030017460	S.CER ECJ0EB1E102K	B	71/21.8
C383	4030016930	S.CER ECJ0EB1A104K	B	80.6/38.8
C384	4030016930	S.CER ECJ0EB1A104K	B	76/38.6
C385	4030016930	S.CER ECJ0EB1A104K	T	19.3/25
C386	4030017460	S.CER ECJ0EB1E102K	T	40.2/41.1
C387	4030017660	S.CER ECJ0EC1H330J	T	4.7/8.6
C388	4030017660	S.CER ECJ0EC1H330J	T	4.7/21.8
C389	4030016790	S.CER ECJ0EB1C103K	B	7.2/11.2
C392	4030017590	S.CER ECJ0EC1H070C	B	77.5/29.1
C394	4030017460	S.CER ECJ0EB1E102K	T	46.6/17.7
C395	4030016930	S.CER ECJ0EB1A104K	T	45.4/16.9
C396	4030017460	S.CER ECJ0EB1E102K	T	28/38.1
C397	4030017460	S.CER ECJ0EB1E102K	T	30.3/31
C398	4030017460	S.CER ECJ0EB1E102K	T	15.6/20.2
C399	4030017420	S.CER ECJ0EC1H470J	B	51.9/19.2
C400	4030017420	S.CER ECJ0EC1H470J	T	7.5/25.7
C401	4030017420	S.CER ECJ0EC1H470J	T	58.8/12.8
C402	4030018860	S.CER ECJ0EB0J105K	B	34/5.9
C403	4030018860	S.CER ECJ0EB0J105K	T	7.5/24.8
C404	4030017460	S.CER ECJ0EB1E102K	T	104.5/33.3
C405	4030017400	S.CER ECJ0EC1H220J	B	80.6/39.7
J1	6510025220	S.CNR AXK540145J	T	14.5/36.4
J2	6510025220	S.CNR AXK540145J	T	36.5/36.4
J3	6510025190	S.CNR IMSA-9639S-20Y905	T	52.6/12.7
J4	6510023970	S.CNR 20P3.5-JMCS-G-B-TF (N)	T	109/34.7
S3	2260002840	SW SKHLLFA010		
S4	2260002800	S.SW SW-167 (SKQTLAE010)	T	53.5/44.2
S5	2260002800	S.SW SW-167 (SKQTLAE010)	T	63.4/44.2
S6	2260002800	S.SW SW-167 (SKQTLAE010)	T	106.4/44.2
EP2	6910015370	S.BEA ACZ1005Y-102-T	B	53/23.9
EP3	6910015370	S.BEA ACZ1005Y-102-T	B	53/22.3
EP4	6910015370	S.BEA ACZ1005Y-102-T	B	58.6/23
EP5	6910015370	S.BEA ACZ1005Y-102-T	B	71.9/17
EP6	6910015370	S.BEA ACZ1005Y-102-T	B	72.3/24.4

[RF UNIT]

REF NO.	ORDER NO.	DESCRIPTION	M.	H/V LOCATION
IC601	1110002751	S.IC TA75S01F (TE85R,F)	T	24.4/23.1
Q601	1560001231	S.FET RD07MVS1-T112	B	8/6.5
Q602	1560001241	S.FET RD01MUS1-T113	B	3.5/13.2
Q603	1530000371	S.TR 2SC3356-T1B S (R25)	B	7.5/17.5
Q606	1590003290	S.TR UNR9213J-(TX)	T	21/20.4
D601	1750000581	S.DIO 1SV307 (TPH3,F)	T	20.3/10
D602	1750000581	S.DIO 1SV307 (TPH3,F)	T	22.1/10
D603	1750000581	S.DIO 1SV307 (TPH3,F)	B	19.2/14
D604	1790001670	S.DIO RB706F-40T106	T	17.4/6.1
D606	1790001250	S.DIO MA2S111-(TX)	T	29.8/21.7
D607	1790001670	S.DIO RB706F-40T106	B	28.1/16.2
D608	1730002430	S.ZEN MA8150-M (TX)	T	16/20.5
FI601	2040001440	S.LC NFE31PT152Z1E9L	B	14.7/17.1
L601	6200008700	S.COL 0.30-0.9-6TR 17.5N	B	30.7/9.4
L602	6200008700	S.COL 0.30-0.9-6TR 17.5N	B	30/12.1
L603	6200008240	S.COL 0.30-0.9-5TL 14N	B	26.2/12.7
L604	6200008250	S.COL 0.30-0.9-7TL 21N	B	21.1/13.9
L605	6200002851	S.COL NLV25T-R82J	T	24.3/11
L607	6200009470	S.COL 0.40-0.9-2TL	B	16.9/5.6
L608	6200009470	S.COL 0.40-0.9-2TL	B	14.8/5.5
L609	6200008220	S.COL 0.40-1.4-5TR 21N	B	9.4/11.7
L611	6200007981	S.COL ELJRF 4N7DFB (4.7)	B	8.7/22.5
L612	6200005661	S.COL ELJRE 10NGFA [H]	B	5.3/18.5
L612	6200005681	S.COL ELJRE 15NGFA [L]	B	5.3/18.5
L613	6200006190	S.COL BLM21PG300SN1D	T	13.1/20.2
L614	6200008001	S.COL ELJRF 3N3DFB (3.3)	B	4/8.2
R601	7030003680	S.RES ERJ3GEYJ 104 V (100 k)	T	29/8.1
R603	7030009140	S.RES ERJ2GEJ 272 X (2.7 k)	B	18.4/4.2

[L]=Low band [H]=High band

[RF UNIT]

REF NO.	ORDER NO.	DESCRIPTION	M.	H/V LOCATION
R604	7030005120	S.RES ERJ2GEJ 102 X (1 k)	T	17.7/9
R605	7030005050	S.RES ERJ2GEJ 103 X (10 k)	T	17.7/10
R606	7030005050	S.RES ERJ2GEJ 103 X (10 k)	T	27.8/20.4
R607	7030005100	S.RES ERJ2GEJ 154 X (150 k)	T	19/20.4
R608	7030005110	S.RES ERJ2GEJ 224 X (220 k)	T	26.6/22
R609	7030005530	S.RES ERJ2GEJ 100 X (10)	B	24.6/24.6
R610	7030007290	S.RES ERJ2GEJ 222 X (2.2 k)	T	28.6/22
R611	7030004990	S.RES ERJ2GEJ 221 X (220)	T	29.4/20
R613	7030005720	S.RES ERJ2GEJ 563 X (56 k)	B	4.2/7
R614	7030005040	S.RES ERJ2GEJ 472 X (4.7 k)	B	2.4/8.2
R616	7030005720	S.RES ERJ2GEJ 563 X (56 k)	B	2.5/17.2
R617	7030005040	S.RES ERJ2GEJ 472 X (4.7 k)	B	3.7/17.4
R618	7030009160	S.RES ERJ2GEJ 181 X (180)	B	4.2/16.2
R619	7030003860	S.RES ERJ3GE JPW V	B	6.7/13.5
R621	7030005220	S.RES ERJ2GEJ 223 X (22 k)	B	6.5/20.7
R624	7030005120	S.RES ERJ2GEJ 102 X (1 k)	T	8.2/16.7
R625	7520000240	S.POS PRF18BC471QB1RB	T	6.4/12.5
R626	7030008290	S.RES ERJ2GEJ 183 X (18 k)	T	7.7/20.2
R628	7030003370	S.RES ERJ3GEYJ 271 V (270)	T	26.7/17
R629	7030003370	S.RES ERJ3GEYJ 271 V (270)	T	25.4/17
R631	7030005100	S.RES ERJ2GEJ 154 X (150 k)	T	21.7/18.6
R632	7030009140	S.RES ERJ2GEJ 272 X (2.7 k)	B	28.1/13.9
R633	7030009140	S.RES ERJ2GEJ 272 X (2.7 k)	B	28.3/19
C601	4030009350	S.CER C1608 CH 1H 3R5B-T [L]	B	30.6/6.4
C601	4030009530	S.CER C1608 CH 1H 030B-T [H]	B	30.6/6.4
C602	4030006990	S.CER C1608 CH 1H 080D-T [H]	B	28.3/9.2
C602	4030007000	S.CER C1608 CH 1H 090D-T [L]	B	28.3/9.2
C603	4030009520	S.CER C1608 CH 1H 020B-T	B	28.3/11.8
C604	4030006980	S.CER C1608 CH 1H 070D-T	B	26.9/10.4
C604	4030009920	S.CER C1608 CH 1H 050B-T [H]	B	26.9/10.4
C604	4030011770	S.CER C1608 CH 1H 060B-T [L]	B	26.9/10.4
C605	4030009520	S.CER C1608 CH 1H 020B-T	B	25/10.9
C606	4030009920	S.CER C1608 CH 1H 050B-T [H]	B	23.1/10.4
C606	4030011770	S.CER C1608 CH 1H 060B-T [L]	B	23.1/10.4
C607	4030006860	S.CER C1608 JB 1H 102K-T	B	23.4/12.3
C610	4030009920	S.CER C1608 CH 1H 050B-T	B	20.9/10.7
C611	4030017580	S.CER ECJ0EC1H060C [H]	B	21.1/16.1
C611	4030017620	S.CER ECJ0EC1H100C [L]	B	21.1/16.1
C612	4030006860	S.CER C1608 JB 1H 102K-T	T	20.3/7
C613	4030017460	S.CER ECJ0EB1E102K	T	25.7/13.2
C614	4030017460	S.CER ECJ0EB1E102K	T	25.3/19.2
C616	4030006860	S.CER C1608 JB 1H 102K-T	B	20.2/7.3
C617	4030017460	S.CER ECJ0EB1E102K	T	18.4/4.2
C618	4030017460	S.CER ECJ0EB1E102K	T	17.8/8
C620	4030009910	S.CER C1608 CH 1H 040B-T	B	18.3/8
C623	4030019030	S.CER GQM1882C1H220JB01D	B	15.1/7.3
C624	4030019110	S.CER GQM1882C1H390JB01D	B	13.3/6.5
C628	4030017460	S.CER ECJ0EB1E102K	T	28.2/17.6
C629	4030016790	S.CER ECJ0EB1C103K	T	22.2/22.2
C630	4030017460	S.CER ECJ0EB1E102K	B	21.1/20.2
C631	4030016930	S.CER ECJ0EB1A104K	T	27.6/22
C632	4030017460	S.CER ECJ0EB1E102K	B	25.9/18.7
C633	4030016930	S.CER ECJ0EB1A104K	T	24.5/25.3
C634	4030017460	S.CER ECJ0EB1E102K	T	28.6/18.8
C635	4030017460	S.CER ECJ0EB1E102K	B	13.8/14.2
C636	4030016790	S.CER ECJ0EB1C103K	B	13.8/15.1
C637	4030017460	S.CER ECJ0EB1E102K	B	8.3/14.1
C639	4030017460	S.CER ECJ0EB1E102K	B	2.2/7
C640	4030017420	S.CER ECJ0EC1H470J	B	3.2/7
C642	4030017460	S.CER ECJ0EB1E102K	T	2.7/9.6
C643	4030017620	S.CER ECJ0EC1H100C [L]	B	3.5/9.3
C644	4030017420	S.CER ECJ0EC1H470J [L]	B	4.7/9.8
C644	4030017670	S.CER ECJ0EC1H390J [H]	B	4.7/9.8
C646	4030017460	S.CER ECJ0EB1E102K	B	2.5/16.2
C647	4030017420	S.CER ECJ0EC1H470J	T	1.7/17
C648	4030017460	S.CER ECJ0EB1E102K	T	4.1/17.7
C650	4030017350	S.CER ECJ0EC1H020B	B	7/15.3
C651	4030017620	S.CER ECJ0EC1H100C	B	5.5/16.4
C653	4030017420	S.CER ECJ0EC1H470J	B	8.3/19.7
C654	4030017420	S.CER ECJ0EC1H470J	T	5.5/19
C655	4030017460	S.CER ECJ0EB1E102K	B	5.8/21.9
C656	4030017460	S.CER ECJ0EB1E102K	T	6.7/22.6
C657	4030017460	S.CER ECJ0EB1E102K	T	17/14.9
C659	4030017460	S.CER ECJ0EB1E102K	T	8.7/20.2
C660	4030017360	S.CER ECJ0EC1H030B	B	8.7/20.9
C661	4030016930	S.CER ECJ0EB1A104K	T	14.8/15.1
C662	4030017460	S.CER ECJ0EB1E102K	T	13.8/15.1
C663	4030017420	S.CER ECJ0EC1H470J	T	12.8/15.1
C667	4030017420	S.CER ECJ0EC1H470J	B	7.2/11.2
C668	4030017460	S.CER ECJ0EB1E102K	B	28.3/18.1
J601	6910017940	CNR IMSA-9230B-1-05Z118-PT1		
J602	6910017940	CNR IMSA-9230B-1-05Z118-PT1		
F601	5210000970	S.FUS ERBSE3R00U	T	13.9/22.4
EP602	6910015370	S.BEA ACZ1005Y-102-T	T	6.7/20.2

M.=Mounted side (T: Mounted on the Top side, B: Mounted on the Bottom side)
S.=Surface mount

[VR UNIT]

REF NO.	ORDER NO.	DESCRIPTION	M.	H/V LOCATION
Q701	1590001400	S.TR XP1214 (TX)	T	32.2/6.2
R701	7410001140	S.ARY EXB28V104JX	T	11.4/1.8
R702	7030007280	S.RES ERJ2GEJ 331 X (330)	T	31.7/8.6
R703	7030005030	S.RES ERJ2GEJ 152 X (1.5 k)	T	32.7/8.6
R704	7210003061	VAR TP76N00N-15F-A103-2251A		
R705	7030005090	S.RES ERJ2GEJ 104 X (100 k)	T	13.2/2.8
C701	4030017420	S.CER ECJ0EC1H470J	T	10.1/5.2
C702	4030017420	S.CER ECJ0EC1H470J	T	11.1/5.2
C703	4030017420	S.CER ECJ0EC1H470J	T	12.1/5.2
C704	4030017420	S.CER ECJ0EC1H470J	T	14.3/3.2
J701	6510024930	S.CNR 20RF-JMCSG1BTF	B	11.4/4.1
DS701	5040002670	S.LED CL-165HR/YG	T	33.5/11.1
S701	2250000490	ECR TP70TF5163-15.9F-2775		
S702	2230001060	S.SW EVQ-PUL 02K	T	8/10.4

[JACK UNIT]

REF NO.	ORDER NO.	DESCRIPTION	M.	H/V LOCATION
D801	1790001810	S.VSR AVR-M1005C080MTABB	B	13.7/1.7
D802	1790001810	S.VSR AVR-M1005C080MTABB	B	14.7/3.8
D803	1790001810	S.VSR AVR-M1005C080MTABB	B	13.8/3.8
D804	1790001810	S.VSR AVR-M1005C080MTABB	B	14.1/2.6
D805	1790001810	S.VSR AVR-M1005C080MTABB	B	13.5/8.1
J801	6510025140	S.CNR 10FLT-SM1-TB	B	5/2.6
EP801	6910012350	S.BEA MMZ1608Y 102BT	B	10/3.5
EP802	6910012350	S.BEA MMZ1608Y 102BT	B	10/2.2
EP803	6910012350	S.BEA MMZ1608Y 102BT	B	10/9.1

• BC-160 (Optional product)

[MAIN UNIT]

REF NO.	ORDER NO.	DESCRIPTION	M.	H/V LOCATION
IC1	1110006480	S.IC NJM2801U1-0543-TE1	B	10.2/62.3
IC2	1110003071	S.IC uPC494GS-E1-A	B	13/36.7
IC3	1140012301	S.IC uPD789112AMC-534-5A4-A	B	19.1/19.6
IC4	1110002700	S.IC NJM2904M-TE1	B	35.1/13.8
Q1	1530002060	S.TR 2SC4081 T106 R	B	37.3/63.9
Q2	1550000090	S.FET RSQ035P03TR	B	37.3/60.9
Q3	1530002060	S.TR 2SC4081 T106 R	B	35.8/19.3
Q4	1530002060	S.TR 2SC4081 T106 R	B	41.6/18.3
Q5	1590000430	S.TR DTC144EUA T106	B	23.7/26.6
Q6	1530002060	S.TR 2SC4081 T106 R	B	22.5/58.2
D1	1730002350	S.ZEN MA8110-M (TX)	B	17.6/60.5
D2	1750000550	S.DIO 1SS355 TE-17	B	34.8/64.4
D3	1750001110	S.DIO SM240A-T	B	44.4/56
D4	1160000070	S.DIO DAN202K T146	B	26.9/20.6
D5	1750000550	S.DIO 1SS355 TE-17	B	27.2/15
X1	6060000790	S.CER CSTCR4M91G	B	10.3/17.7
L1	6190001640	S.COL SLF12555T-101M1R1	B	35.3/52.7
L2	6200002611	S.COL NLV25T-R47J	B	20.8/28.2
R2	7030000460	S.RES MCR10EZHJ 4.7 k	B	20.3/58.6
R3	7030003410	S.RES ERJ3GEYJ 561 V (560)	B	37.3/65.8
R4	7030003200	S.RES ERJ3GEYJ 100 V (10)	B	34.6/61.1
R5	7030009580	S.RES ERJ8RSJ R12V	B	31.8/73
R6	7030000540	S.RES MCR10EZHJ 22 k	B	30.1/26.8
R7	7030000380	S.RES MCR10EZHJ 1 k	B	30.1/29.6
R8	7030003520	S.RES ERJ3GEYJ 472 V (4.7 k)	B	39.5/18.4
R9	7030003600	S.RES ERJ3GEYJ 223 V (22 k)	B	13.8/30.5
R10	7030000740	S.RES MCR10EZHJ 1 M	B	25.8/34.9
R11	7030000540	S.RES MCR10EZHJ 22 k	B	24.8/37.8
R12	7030003560	S.RES ERJ3GEYJ 103 V (10 k)	B	10.8/30.5
R13	7030003600	S.RES ERJ3GEYJ 223 V (22 k)	B	19.3/34.5
R14	7030003770	S.RES ERJ3GEYJ 564 V (560 k)	B	21/34.5

[L]=Low band [H]=High band

[MAIN UNIT]

REF NO.	ORDER NO.	DESCRIPTION	M.	H/V LOCATION
R15	7030003650	S.RES ERJ3GEYJ 563 V (56 k)	B	21/40.3
R16	7030003770	S.RES ERJ3GEYJ 564 V (560 k)	B	19.3/40.3
R17	7030003560	S.RES ERJ3GEYJ 103 V (10 k)	B	22.7/40.3
R18	7030003410	S.RES ERJ3GEYJ 561 V (560)	B	8.6/43.5
R19	7030003620	S.RES ERJ3GEYJ 333 V (33 k)	B	16.7/42.1
R20	7030000560	S.RES MCR10EZHJ 33 k	B	28.1/40.4
R21	7030000380	S.RES MCR10EZHJ 1 k	B	26.3/28.6
R22	7030000440	S.RES MCR10EZHJ 3.3 k	B	24/11.4
R23	7030000460	S.RES MCR10EZHJ 4.7 k	B	24/8.8
R24	7030000260	S.RES MCR10EZHJ 100 (101)	B	20.3/11.4
R25	7030000260	S.RES MCR10EZHJ 100 (101)	B	20.3/8.8
R26	7030000500	S.RES MCR10EZHJ 10 k	B	30.5/22
R27	7030007220	S.RES ERA3YED 202V (2 k)	B	30.2/19.6
R28	7030011200	S.RES ERA3YEB 303V (30 k)	B	30/18.1
R29	7030011190	S.RES ERA3YEB 103V (10 k)	B	26.9/16.6
R30	7030005871	S.RES ERA3YKD 104V (100 k)	B	40.4/15.1
R31	7030003560	S.RES ERJ3GEYJ 103 V (10 k)	B	29.8/15.9
R32	7030005341	S.RES ERA3YED 332V (3.3 k)	B	43.4/11.1
R33	7030000500	S.RES MCR10EZHJ 10 k	B	31.7/9.8
R34	7030000740	S.RES MCR10EZHJ 1 M	B	42.1/14.4
R35	7030003440	S.RES ERJ3GEYJ 102 V (1 k)	B	40.4/12.2
R36	7030000460	S.RES MCR10EZHJ 4.7 k	B	34.7/23.8
R37	7030005501	S.RES ERA3YKD 124V (120 k)	B	33.6/21.3
R38	7030005671	S.RES ERA3YKD 393V (39 k)	B	30.1/25.1
R39	7030000010	S.RES MCR10EZHJ JPW	B	28.1/42.2
R40	7030000010	S.RES MCR10EZHJ JPW	B	27.7/8.4
R41	7030000010	S.RES MCR10EZHJ JPW	B	34.6/9.2
R42	7030008240	S.RES ERJ12YJ0R00U	B	38.9/7.4
R43	7030000010	S.RES MCR10EZHJ JPW	B	30.1/33.3
R44	7030000010	S.RES MCR10EZHJ JPW	B	28.1/33.3
R45	7030000010	S.RES MCR10EZHJ JPW	B	29.1/38
R46	7030000010	S.RES MCR10EZHJ JPW	B	29.1/36.1
R47	7030000010	S.RES MCR10EZHJ JPW	B	43.9/18.3
R48	7030008240	S.RES ERJ12YJ0R00U	B	43/28.9
R49	7030000010	S.RES MCR10EZHJ JPW	B	23.5/5.7
R50	7030008240	S.RES ERJ12YJ0R00U	B	34.1/38.2
R51	7030000010	S.RES MCR10EZHJ JPW	B	23.9/34.9
R52	7030000010	S.RES MCR10EZHJ JPW	B	24.7/32
R53	7030008240	S.RES ERJ12YJ0R00U	B	38.6/33.1
R54	7030000010	S.RES MCR10EZHJ JPW	B	34.4/33
R55	7030000010	S.RES MCR10EZHJ JPW	B	32/60.1
R56	7030000010	S.RES MCR10EZHJ JPW	B	42.1/41.5
R57	7030000010	S.RES MCR10EZHJ JPW	B	37.2/41.5
R58	7030000010	S.RES MCR10EZHJ JPW	B	24.9/57
R59	7030000010	S.RES MCR10EZHJ JPW	B	27.6/49.3
R60	7030000010	S.RES MCR10EZHJ JPW	B	16.3/58.3
R61	7030000010	S.RES MCR10EZHJ JPW	B	4.9/31.7
R62	7030000010	S.RES MCR10EZHJ JPW	B	39.1/41.5
R63	7030000010	S.RES MCR10EZHJ JPW	B	31.4/43.6
R64	7030000010	S.RES MCR10EZHJ JPW	B	40.1/38.7
R65	7030000010	S.RES MCR10EZHJ JPW	B	4.9/49.5
R66	7030003560	S.RES ERJ3GEYJ 103 V (10 k)	B	8.2/13.6
R67	7030000100	S.RES MCR10EZHJ 4R7 (4.7)	B	10.2/45.1
C1	4030006900	S.CER C1608 JB 1H 103K-T	B	44.5/70.7
C2	4030006900	S.CER C1608 JB 1H 103K-T	B	48.2/73.5
C3	4030006860	S.CER C1608 JB 1H 102K-T	B	44.5/67.8
C4	4030006900	S.CER C1608 JB 1H 103K-T	B	32.9/69.7
C5	4030006900	S.CER C1608 JB 1H 103K-T	B	32.9/71.1
C6	4510008540	S.ELE EEE1CA100SR	B	17.5/63.8
C7	4030011600	S.CER C1608 JB 1E 104K-T	B	13.4/60.8
C8	4030006900	S.CER C1608 JB 1H 103K-T	B	9.2/58.7
C9	4030011600	S.CER C1608 JB 1E 104K-T	B	13.4/63.8
C10	4510009150	S.ELE EEE1EA470WP	B	43.6/62.8
C11	4030006900	S.CER C1608 JB 1H 103K-T	B	35.8/67.9
C12	4030006900	S.CER C1608 JB 1H 103K-T	B	32.4/67.9
C13	4510009150	S.ELE EEE1EA470WP	B	26.5/62.8
C14	4510008660	S.ELE EEE0JA220SR	B	34.3/28
C15	4510008660	S.ELE EEE0JA220SR	B	40.8/23.8
C16	4030006860	S.CER C1608 JB 1H 102K-T	B	12.3/30.5
C17	4030011600	S.CER C1608 JB 1E 104K-T	B	19.3/37.4
C18	4030006900	S.CER C1608 JB 1H 103K-T	B	21/37.4
C19	4030006900	S.CER C1608 JB 1H 103K-T	B	13.1/42.2
C20	4030009980	S.CER C1608 JB 1H 152K-T	B	8.6/42.1
C21	4030011600	S.CER C1608 JB 1E 104K-T	B	9.5/21.9
C22	4030006900	S.CER C1608 JB 1H 103K-T	B	19/25.5
C23	4030006900	S.CER C1608 JB 1H 103K-T	B	26.9/23.2
C24	4030006900	S.CER C1608 JB 1H 103K-T	B	26.9/18
C25	4030004760	S.CER C2012 JF 1H 104Z-T	B	33.2/17.5
C26	4030006900	S.CER C1608 JB 1H 103K-T	B	41.9/11.1
C27	4030006900	S.CER C1608 JB 1H 103K-T	B	29.5/12.6
C28	4030006900	S.CER C1608 JB 1H 103K-T	B	30.1/23.7
J1	6510024940	CNR HEC2305-016250		
DS1	5040002740	LED RT3-03HRYG		

M.=Mounted side (T: Mounted on the Top side, B: Mounted on the Bottom side)
S.=Surface mount

SECTION 8 MECHANICAL PARTS AND DISASSEMBLY

[CHASSIS PARTS]

REF. NO.	ORDER NO.	DESCRIPTION	QTY.
J1	6910015910	Connector ANT connector-104	1
J2	6910015860	Connector IMSA-6277S-02A-G	1
W1	8900014980	Cable OPC-1589	1
W2	8900014970	Cable OPC-1590	1
SP1	2510001360	Speaker K036NAX040A00-55	1
MP1	8010020290	2893 chassis	1
MP2	8210022600	2893 T-front panel assembly [10-key type] (including MP27, MP28)	1
	8210022940	2893 S-front panel assembly [4-key type] (including MP27, MP28)	1
MP3	8210022540	2893 rear panel	1
MP4	8310065610	2893 window plate	1
MP7	8930068640	2893 lens	1
MP8	8610012920	Knob N345	1
MP10	8610012930	Knob N346	1
MP12	8930068610	2893 keyboard [10-key type]	1
	8930068960	2893 4-key [4-key type]	1
MP14	8930068650	2893 main seal	1
MP15	8930068660	2893 washer plate	1
MP16	8510017650	2893 shield plate	1
MP17	8930063060	2721 T-rubber	1
MP18	8930070360	2775 release plate (A)	1
MP19	8930059360	2600 release button	1
MP20	8930056540	Push spring (AH)	2
MP22	8930058720	2600 9-pin sheet	1
MP23	8930055890	2403 connector sheet	1
MP24	8930055730	2403 connector seal	1
MP26	8930046020	1123 sheet (A)-1	1
MP29	8930063410	2775 B-top plate	1
MP30	8830001700	VR nut (Q)	2
MP31	8830001720	2721 ANT nut	1
MP32	8930048840	2135 MIC sponge	1
MP33	8810008641	Screw FH BT M2 × 4 NI-ZC3	6
MP34	8810008971	Screw FH BT M2 × 3.5 NI-ZC3	8
MP35	8810009511	Screw PH BT M2 × 4 NI-ZC3	4
MP36	8810010430	Screw trass M3 × 5 SUS SSBC	1
MP38	8810009561	Screw PH BT M2 × 6 NI-ZK3	2
MP39	8810009221	Screw PH B0 M2 × 8 NI-ZK3	2
MP40	8930069710	Thermally sheet (BC) TC200HS-1.4	1
MP41	8930069860	2893 window sheet	1
MP42	8510017710	2893 earth plate	1
MP44	8930070010	2893 VOL rubber	1

[FRONT UNIT]

REF. NO.	ORDER NO.	DESCRIPTION	QTY.
DS510	5030002830	LCD M4-0078TAY-2	1
MC501	7700002480	Microphone SKB-2746 LPC	1
MP501	8210021460	2803 reflector	1
MP502	8950004430	Double coated tape (O)	2
MP503	8930062540	Sponge (HO)	2
MP505*	6910014760	Plate OG-503040	1
MP506	8930069990	Sponge (IZ)	1

[JACK UNIT]

REF. NO.	ORDER NO.	DESCRIPTION	QTY.
MP801	8950005520	2403 9-pin connector	1
MP802	8930069960	2893 earth spring	1

[MAIN UNIT]

REF. NO.	ORDER NO.	DESCRIPTION	QTY.
S3	2260002840	Switch SKHLLFA010	1
MP1	8510017410	2893 VCO case	1
MP2	8510017420	2893 VCO cover	1

[RF UNIT]

REF. NO.	ORDER NO.	DESCRIPTION	QTY.
J601	6910017940	Connector IMSA-9230B-1-05Z118-PT1	1
J602	6910017940	Connector IMSA-9230B-1-05Z118-PT1	1
MP601*	8510017600	Plate OG-363050	1
MP602*	8930070500	2894 RF spring	1

[VR UNIT]

REF. NO.	ORDER NO.	DESCRIPTION	QTY.
R704	7210003061	Variable resistor TP76N00N-15F-A103-2251A	1
S701	2250000490	Encoder TP70TF5163-15.9F-2775	1

[ACCESSORIES]

REF. NO.	ORDER NO.	DESCRIPTION	QTY.
EP1	Optional product	Antenna FA-SC57U-1 [Low-band]	1
		Antenna FA-SC72U-1 [High-band]	1
EP2	Optional product	Battery BP-232	1
MP1	Optional product	MB-94 (2734 clip assembly)	1
MP2	8210021471	2803 side panel-1	1
MP3	8810010430	Screw trass M3 × 5 SUS SSBC	1

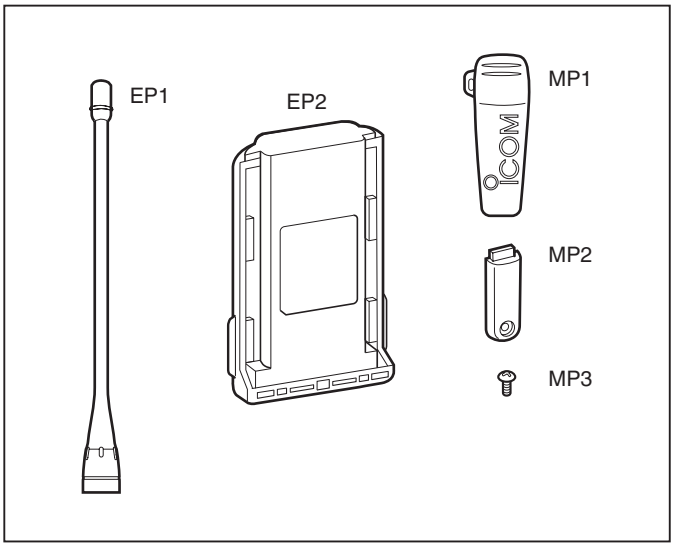

*: Refer to SECTION 10 BOARD LAYOUTS.

Screw abbreviations B0, BT: Self-tapping
PH: Pan head FT: Flat head
ZK: Black SUS: Stainless
NI-ZU: Nickel-Zinc

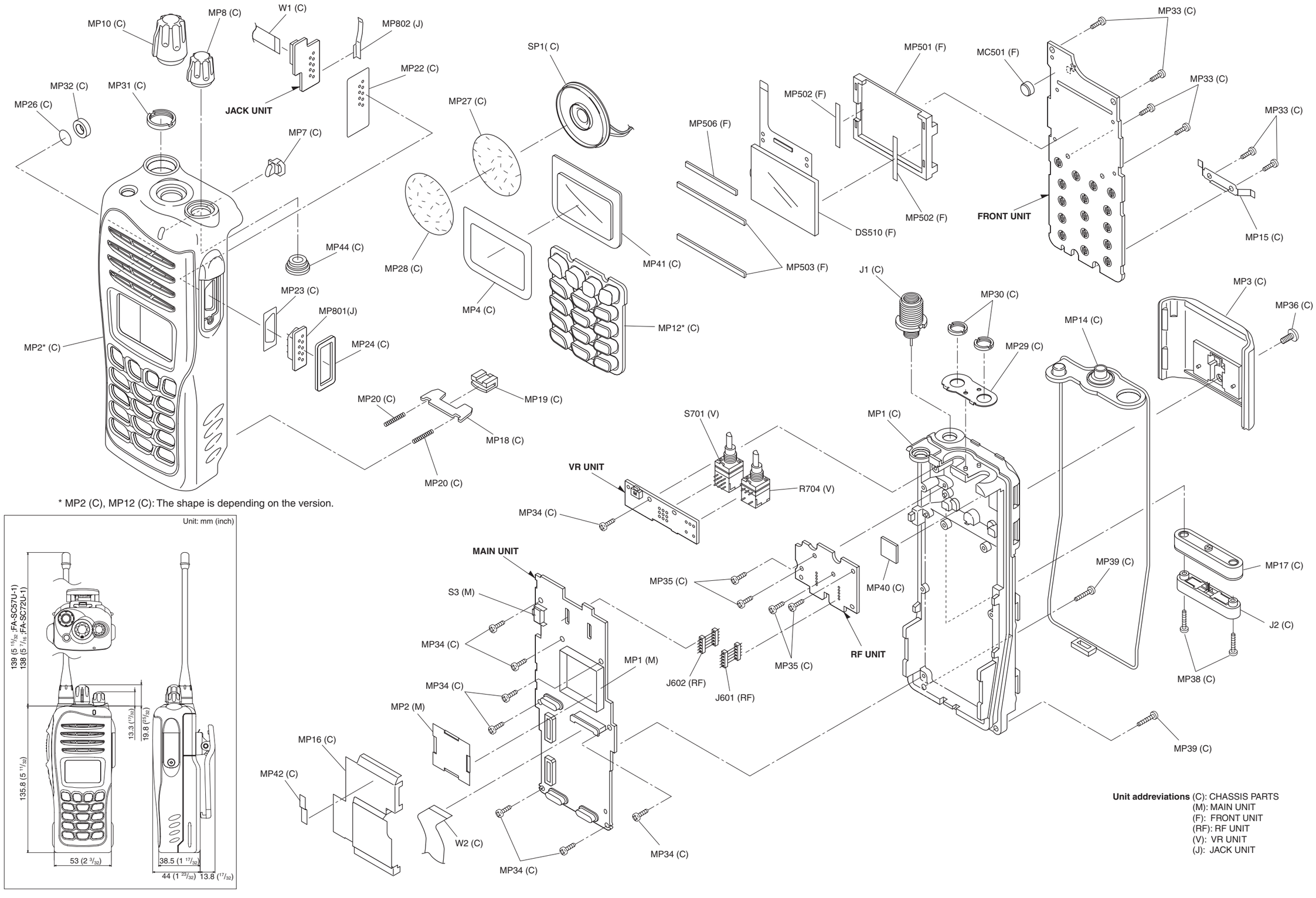

* MP2 (C), MP12 (C): The shape is depending on the version.

SECTION 9 SEMICONDUCTOR INFORMATION

• TRANSISTORS AND FET's

2SA1577 T106 Q (Symbol: HQ) 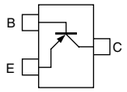	**2SB1132 T100 R** (Symbol: BAR) 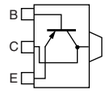	**2SC3356** (Symbol: R25) 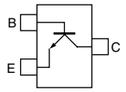	**2SC4116 BL** (Symbol: LL) 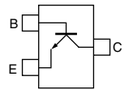	**2SC4215 O** (Symbol: QO) 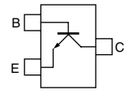
2SC4226 T1 R25 (Symbol: R25) 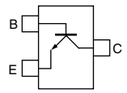	**2SC5107 O** (Symbol: MFO) 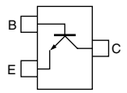	**2SC5700** (Symbol: WB-) 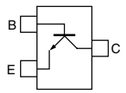	**2SK1829** (Symbol: K1) 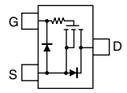	**2SK3019** (Symbol: KN) 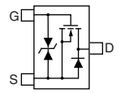
2SK880 Y (Symbol: XY) 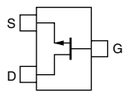	**3SK293** (Symbol: UF) 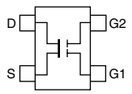	**3SK324UG-TL-E** (Symbol: UG-) 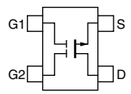	**DTA114EUA T106** (Symbol: 16) 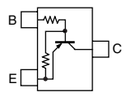	**DTB123 EK T146** (Symbol: F12) 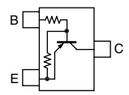
RD01MUS1 (Symbol: K2) 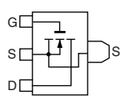	**RD07MVS1** (Symbol: RD07MVS1) 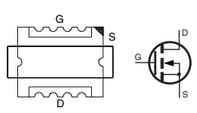	**TPC6103** (Symbol: S3C) 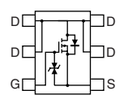	**UMG2N** (Symbol: G2) 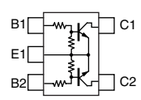	**UNR9113J** (Symbol: 6C) 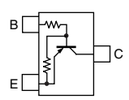
UNR9213J (Symbol: 8C) 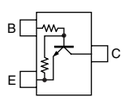	**XP1214** (Symbol: 9H) 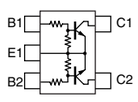	**XP4601** (Symbol: 5C) 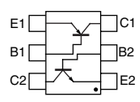	**XP6501 AB** (Symbol: 5N) 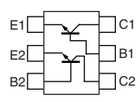	

• DIODES

1SV307 (Symbol: TX) 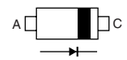	**1SV308** (Symbol: TX) 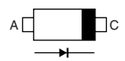	**AVR-M1005C080MTABB** 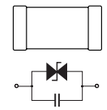	**DAN202 U T106** (Symbol: N) 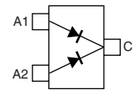	**DAN235E TL** (Symbol: M) 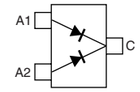
DAP202 U T106 (Symbol: P) 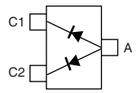	**DAP222 TL** (Symbol: P) 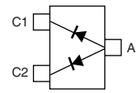	**HVC350B** (Symbol: B0) 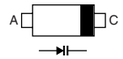	**HVC383B** (Symbol: F4) 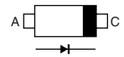	**MA2S077** (Symbol: S) 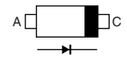
MA2S111 (Symbol: A) 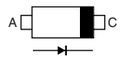	**MA2S728** (Symbol: B) 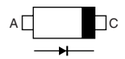	**MA368** (Symbol: 6L) 	**MA8051 M** (Symbol: 5-1) 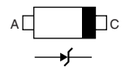	**MA8150 M** (Symbol: 15-) 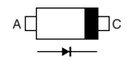
RB706F-40 T106 (Symbol: 3J) 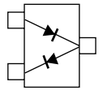				

SECTION 10 BOARD LAYOUTS

10-1 FRONT UNIT
• TOP VIEW

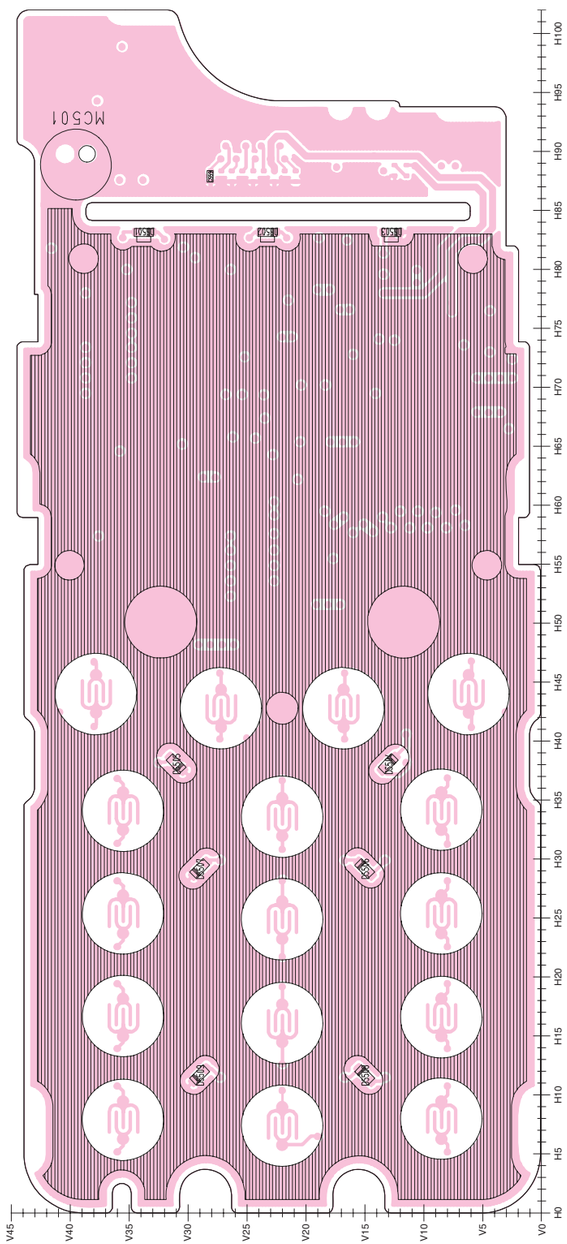

10-2 MAIN UNIT
• TOP VIEW

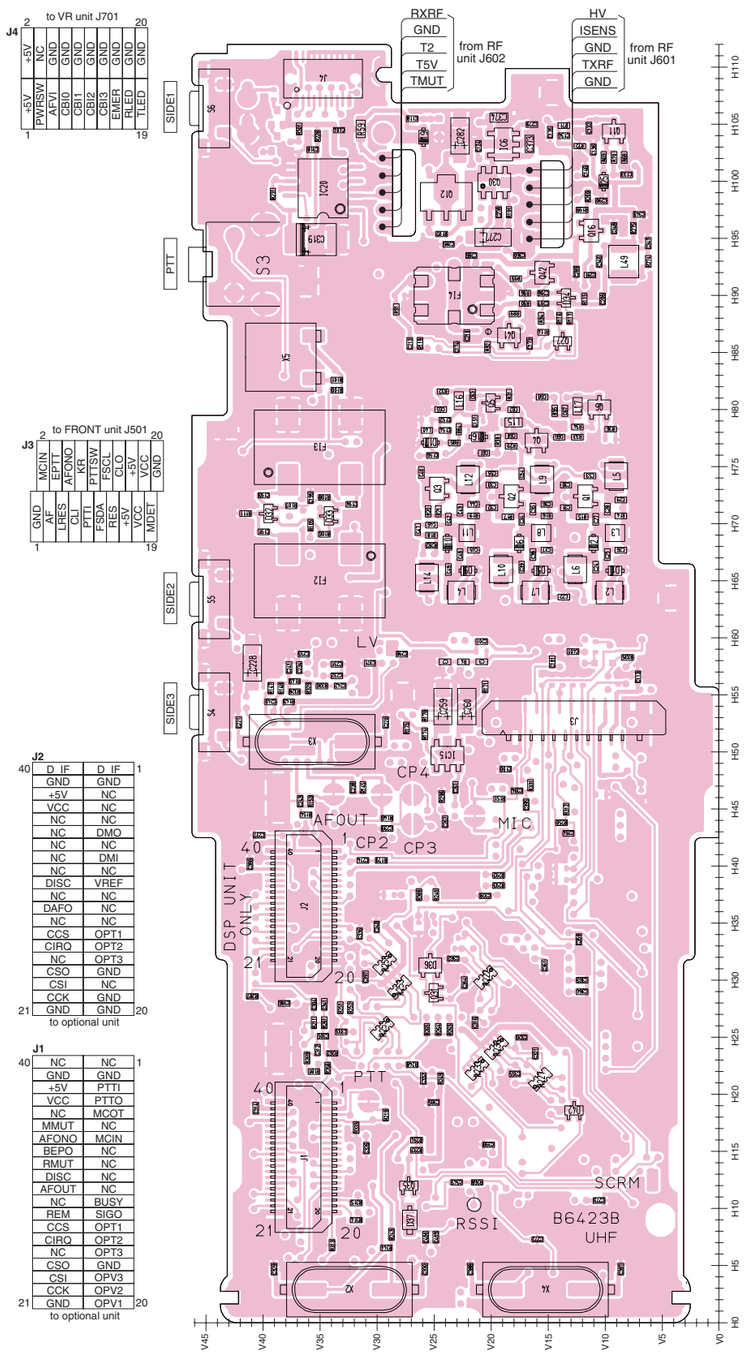

J2

40	D IF	D IF	1
	GND	GND	
	+5V	NC	
	VCC	NC	
	NC	NC	
	NC	DMO	
	NC	NC	
	NC	DMI	
	NC	NC	
	DISC	VREF	
	NC	NC	
	DAFO	NC	
	NC	NC	
	CCS	OPT1	
	CIRQ	OPT2	
	NC	OPT3	
	CSO	GND	
	CSI	NC	
	CCK	GND	
21	GND	GND	20

to optional unit

J1

40	NC	NC	1
	GND	GND	
	+5V	PTTI	
	VCC	PTTO	
	NC	MCOT	
	MMUT	NC	
	AFONO	MCIN	
	BEPO	NC	
	RMUT	NC	
	DISC	NC	
	AFOUT	NC	
	NC	BUSY	
	REM	SIGO	
	CCS	OPT1	
	CIRQ	OPT2	
	NC	OPT3	
	CSO	GND	
	CSI	OPV3	
	CCK	OPV2	
21	GND	OPV1	20

to optional unit

10-3 RF UNIT
• TOP VIEW

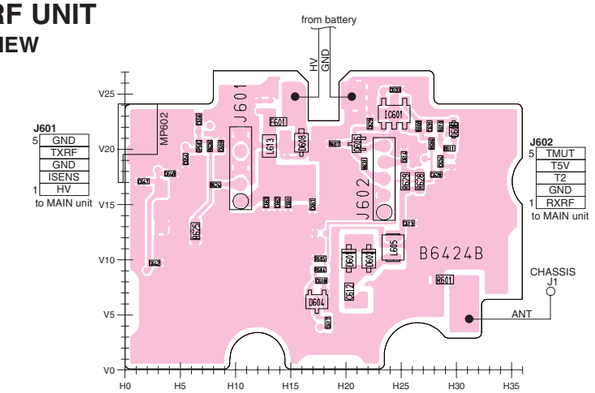

10-4 JACK UNIT
• TOP VIEW

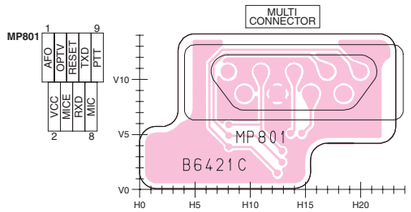

10-5 VR UNIT
• TOP VIEW

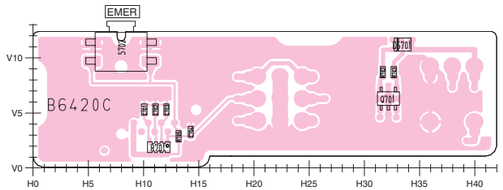

10-6 BC-160
• TOP VIEW

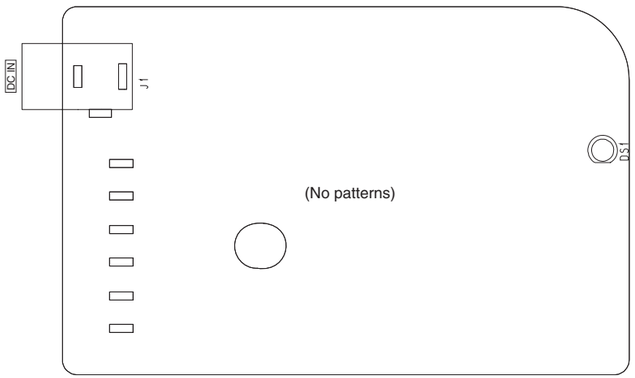

• **BOTTOM VIEW (RF UNIT)**

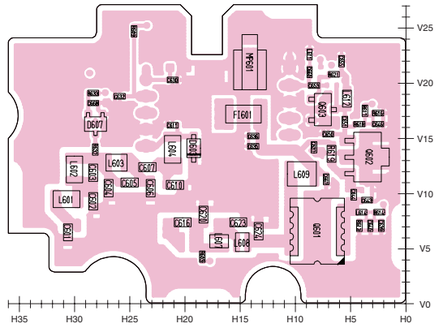

• **BOTTOM VIEW (JACK UNIT)**

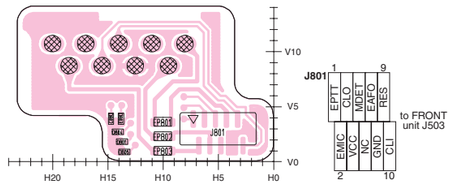

• **BOTTOM VIEW (VR UNIT)**

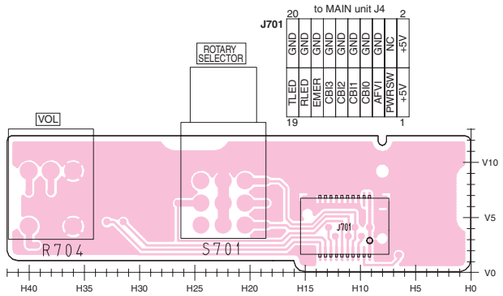

• **BOTTOM VIEW (BC-160)**

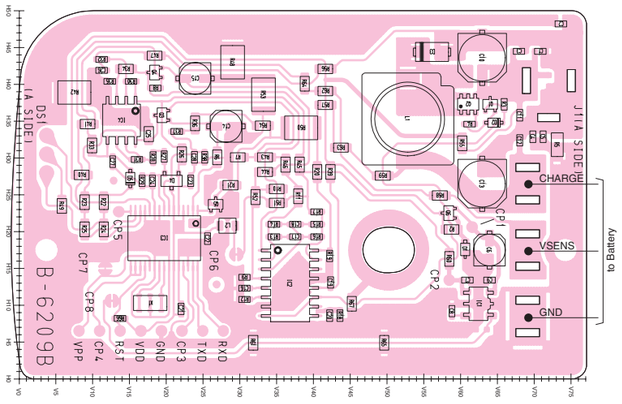

• **BOTTOM VIEW (MAIN UNIT)**

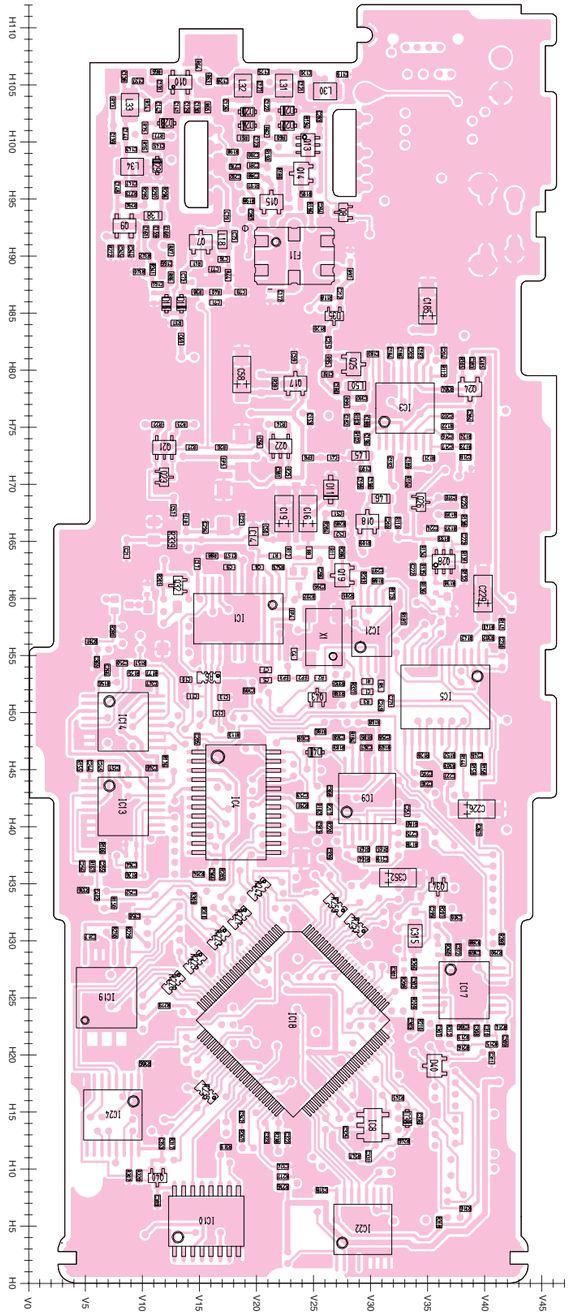

• **BOTTOM VIEW (FRONT UNIT)**

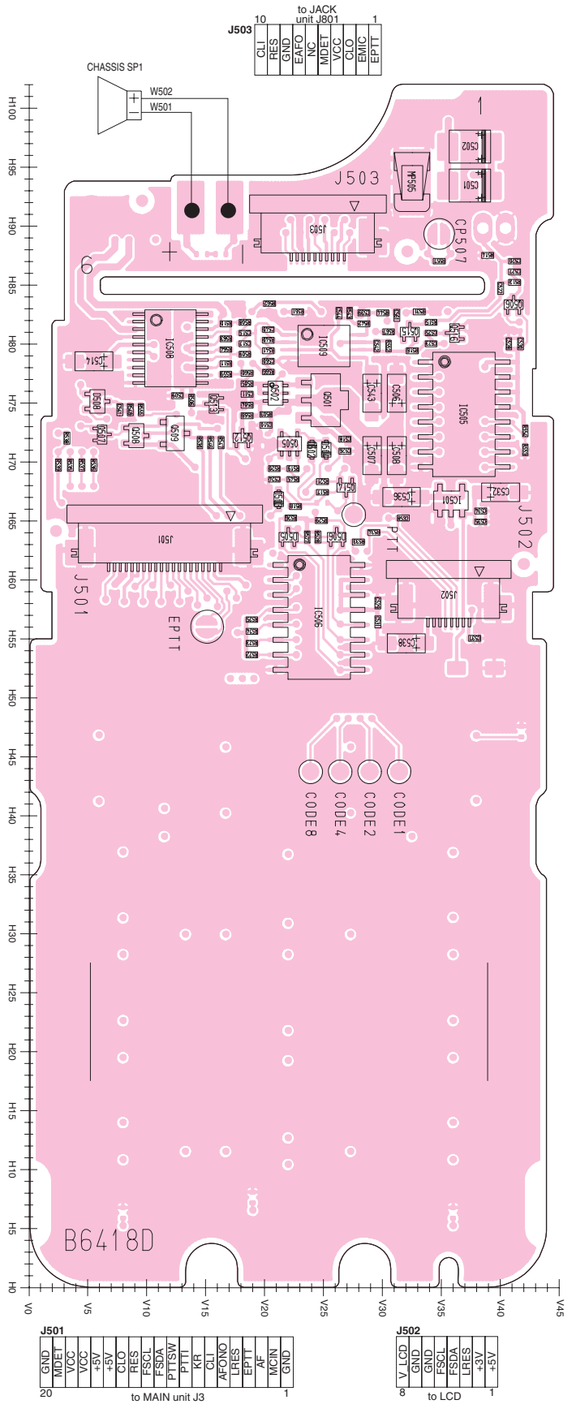

SECTION 11 BLOCK DIAGRAM

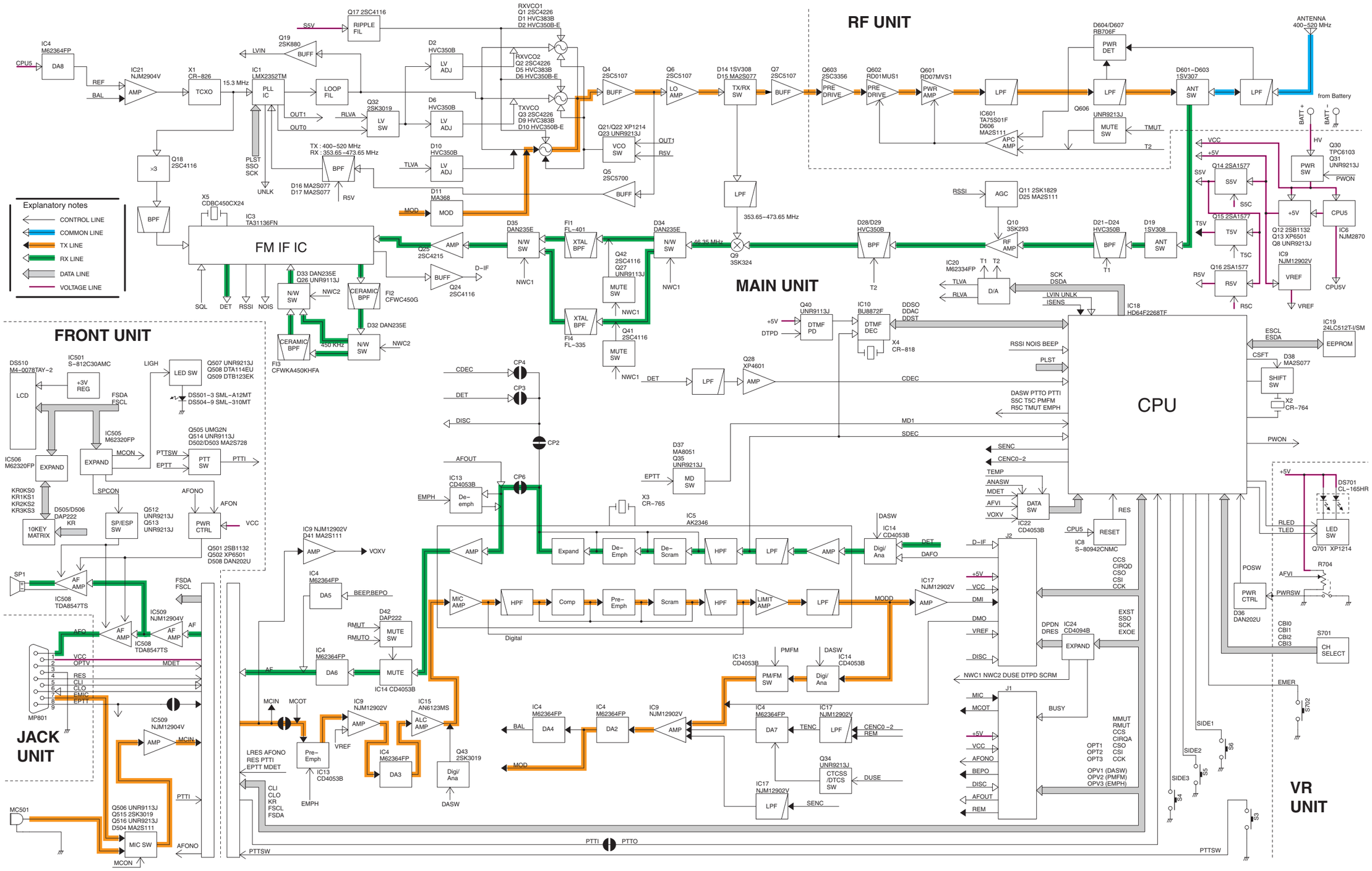

SECTION 12 VOLTAGE DIAGRAMS

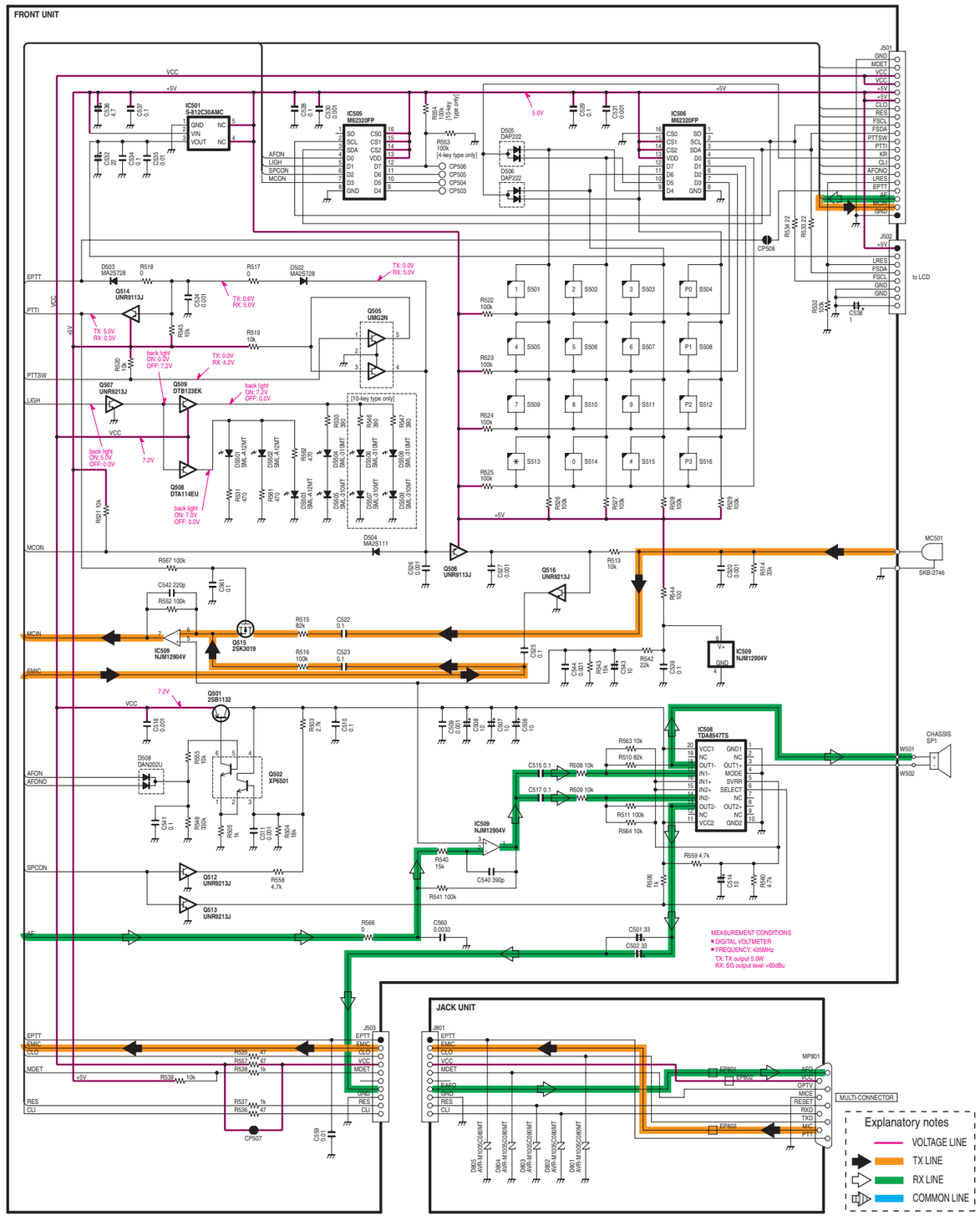

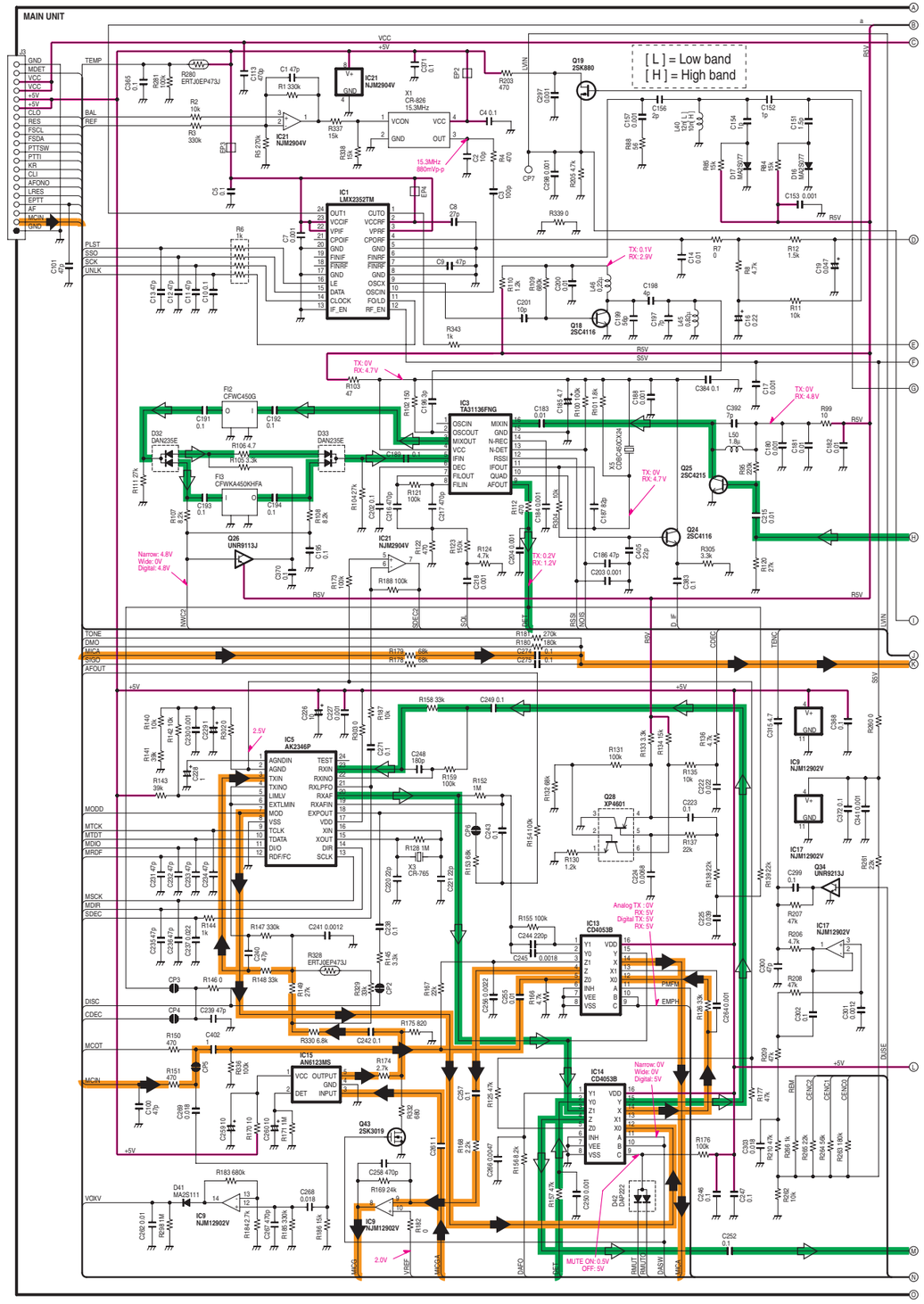

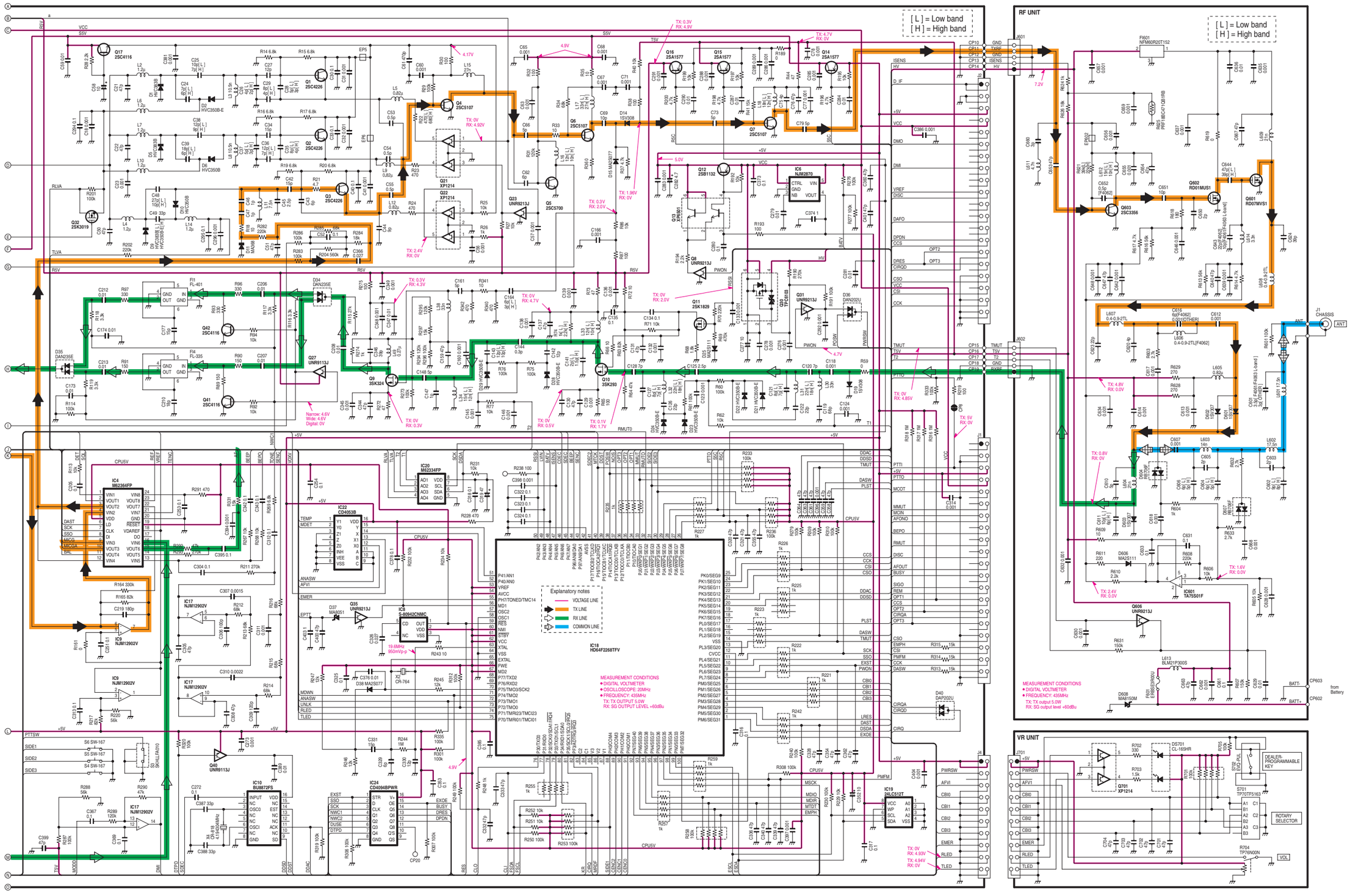
[L] = Low band
[H] = High band
RF UNIT
VR UNIT
Explanatory notes
VOLTAGE LINE
TX LINE
RX LINE
COMMON LINE
MEASUREMENT CONDITIONS
• DIGITAL VOLTMETER
• OSCILLOSCOPE: 20MHz
• FREQUENCY: 435MHz
TX: TX output 5.0W
RX: SG OUTPUT LEVEL +60dBu
MEASUREMENT CONDITIONS
• DIGITAL VOLTMETER
• FREQUENCY: 435MHz
TX: TX output 5.0W
RX: SG output level +60dBu
DEALER-PROGRAMMABLE KEY
ROTARY SELECTOR
VOL
ANT
J1 CHASSIS
from Battery
BATT-
BATT+
CP603
CP602
IC4 M62364FP
IC20 M62334FP
IC22 CD4053B
IC8 S-80942CNMC
IC18 HD64F2268TFV
IC24 CD4094BPWR
IC10 BU8872FS
IC19 24LC512T
IC9 NJM12902V
IC17 NJM12902V
IC601 TA75S01F
Q606 UNR9213J
Q40 UNR9113J
Q35 UNR9213J
Q32 2SK3019
Q17 2SC4116
Q1 2SC4226
Q2 2SC4226
Q3 2SC4226
Q4 2SC5107
Q5 2SC5700
Q6 2SC5107
Q7 2SC5107
Q9 3SK324
Q10 3SK293
Q11 2SK1829
Q12 2SB1132
Q13 XP5501
Q14 2SA1577
Q15 2SA1577
Q16 2SA1577
Q21 XP1214
Q22 XP1214
Q23 UNR9213J
Q27 UNR9113J
Q31 UNR9213J
Q42 2SC4116
Q41 2SC4116
Q603 2SC3356
Q602 RD01MUS1
Q601 RD07MVS1
Q701 XP1214
TX: 0.3V RX: 4.9V
TX: 4.7V RX: 0V
TX: 0V RX: 4.92V
TX: 1.96V RX: 0V
TX: 0.3V RX: 2.0V
TX: 2.4V RX: 0V
TX: 0.3V RX: 4.3V
TX: 0V RX: 4.7V
TX: 0V RX: 2.0V
TX: 0V RX: 0.3V
TX: 0V RX: 0.5V
TX: 0.1V RX: 1.7V
TX: 4.8V RX: 0.0V
TX: 0V RX: 4.85V
TX: 5V RX: 0V
TX: 0.8V RX: 0V
TX: 1.6V RX: 0.0V
TX: 2.4V RX: 0.0V
TX: 0V RX: 4.93V
TX: 4.94V RX: 0V
Narrow: 4.6V
Wide: 4.6V
Digital: 0V
19.6MHz
950mV p-p

SECTION 13 BC-160

[CHASSIS PARTS]

REF. NO.	ORDER NO.	DESCRIPTION	QTY.
MP1	8010019750	2830 case	1
MP2	8110008220	2830 cover	1
MP3	8930039620	Leg cushion (A)	2
MP4	8810008630	Screw PH BT M3 × 6 NI-ZU	1

[MAIN UNIT]

REF. NO.	ORDER NO.	DESCRIPTION	QTY.
J1	6510023070	Connector HEC2305-01-250	1
DS1	5040002740	LED RT3-03HRYG	1
MP1	8930064410	2830 TERMINAL	3

[ACCESSORIES]

REF. NO.	ORDER NO.	DESCRIPTION	QTY.
EP1	0800006050	Charger BC-145A [USA]	1
	0800006060	Charger BC-145E [EUR]	1

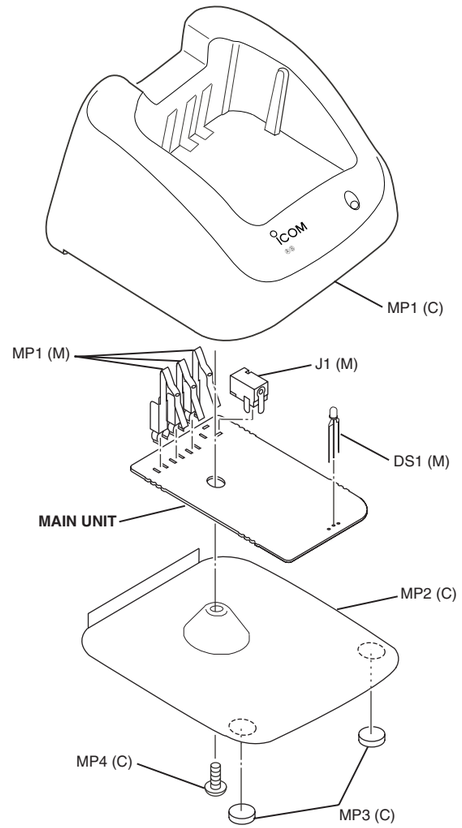

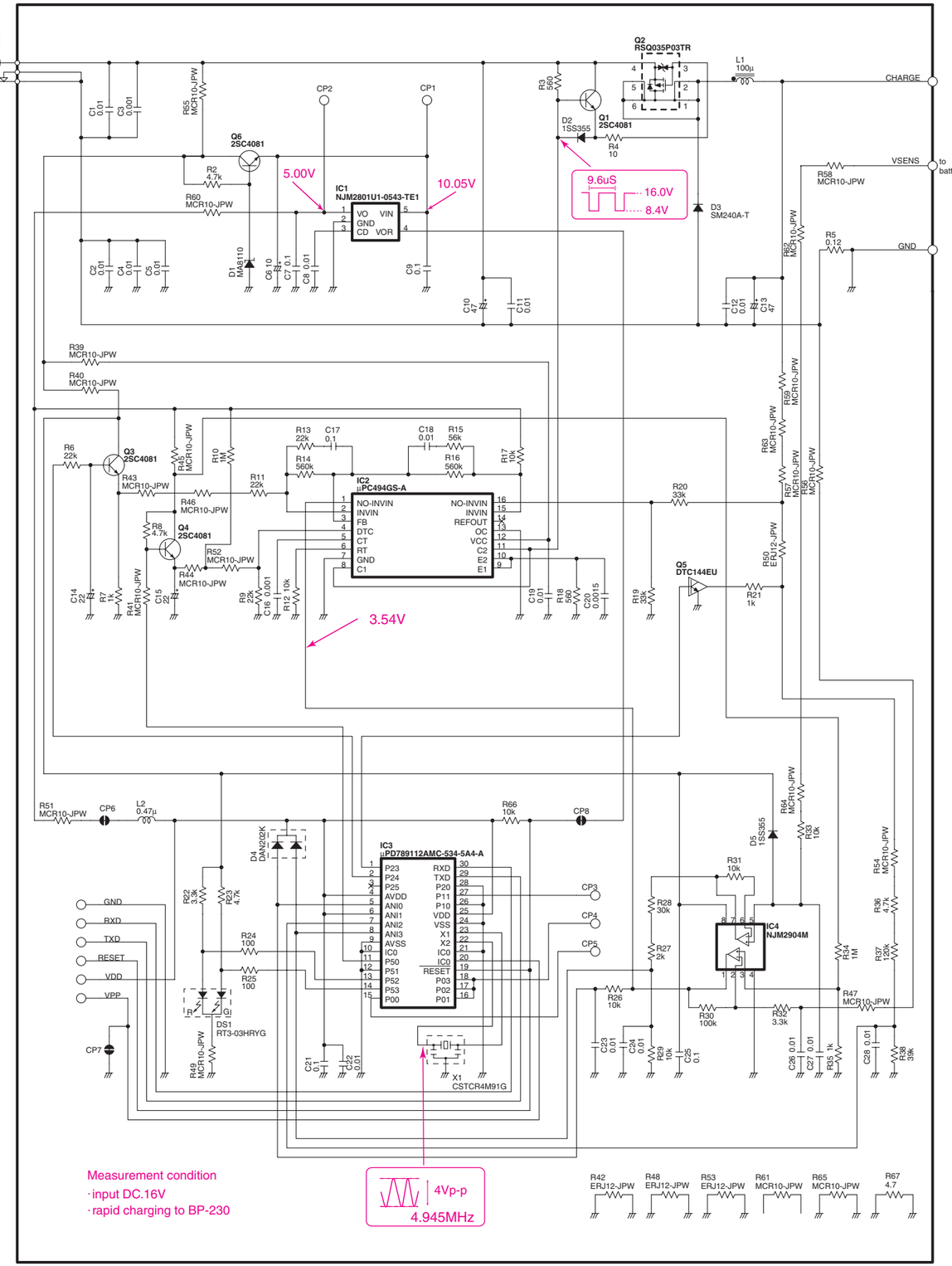

Icom Inc.

1-1-32, Kamiminami, Hirano-ku, Osaka 547-0003, Japan
Phone : +81 (06) 6793 5302
Fax : +81 (06) 6793 0013
URL : http://www.icom.co.jp/world/index.html

Icom America Inc.
<Corporate Headquarters>
2380 116th Avenue N.E., Bellevue, WA 98004, U.S.A.
Phone : +1 (425) 454-8155 Fax : +1 (425) 454-1509
URL : http://www.icomamerica.com
E-mail : sales@icomamerica.com
<Customer Service>
Phone : +1 (425) 454-7619

Icom Canada
Glenwood Centre #150-6165
Highway 17 Delta, B.C., V4K 5B8, Canada
Phone : +1 (604) 952-4266 Fax : +1 (604) 952-0090
URL : http://www.icomcanada.com
E-mail : info@icomcanada.com

Icom (Australia) Pty. Ltd.
A.B.N. 88 006 092 575
Unit 1 / 103 Garden Road, Clayton VIC 3168 Australia
Phone : +61 (03) 9549-7500 Fax : +61 (03) 9549-7505
URL : http://www.icom.net.au
E-mail : sales@icom.net.au

Icom New Zealand
146A Harris Road, East Tamaki,
Auckland, New Zealand
Phone : +64 (09) 274 4062 Fax : +64 (09) 274 4708
URL : http://www.icom.co.nz
E-mail : inquiries@icom.co.nz

Beijing Icom Ltd.
Room C01, 10th Floor, Long Silver Mansion, No. 88,
Yong Ding Road, Haidian District, Beijing, 100039, China
Phone : +86 (010) 5889 4250 Fax : +86 (010) 5889 4250
URL : http://www.bjicom.com
E-mail : bjicom@bjicom.com

Icom (Europe) GmbH
Communication Equipment
Himmelgeister Str. 100, D-40225 Düsseldorf, Germany
Phone : +49 (0211) 346047 Fax : +49 (0211) 333639
URL : http://www.icomeurope.com
E-mail : info@icomeurope.com

Icom Spain S.L
Ctra. Rubi, 88, 08190, Sant Cugat del Valles, Barcelona, SPAIN
Phone : +34 (93) 590 26 70 Fax : +34 (93) 589 04 46
URL : http://www.icomspain.com
E-mail : icom@icomspain.com

Icom (UK) Ltd.
Unit 9, Sea St., Herne Bay, Kent, CT6 8LD, U.K.
Phone : +44 (01227) 741741 Fax : +44 (01227) 741742
URL : http://www.icomuk.co.uk
E-mail : info@icomuk.co.uk

Icom France S.a
Zac de la Plaine, 1, Rue Brindejonc des Moulinais
BP 5804, 31505 Toulouse Cedex, France
Phone : +33 (5) 61 36 03 03 Fax : +33 (5) 61 36 03 00
URL : http://www.icom-france.com
E-mail : icom@icom-france.com

Asia Icom Inc.
6F No.68, Sec. 1 Cheng-Teh Road, Taipei, Taiwan, R.O.C.
Phone : +886 (02) 2559 1899 Fax : +886 (02) 2559 1874
URL : http://www.asia-icom.com
E-mail : sales@asia-icom.com

Icom Polska
Sopot, 3 Maja 54 Poland
Phone : +48 (58) 550 7135 Fax : +48 (58) 551 0484
E-mail : icompolska@icompolska.com.pl

Count on us!

Icom Inc.
1-1-32, Kamiminami, Hirano-ku, Osaka 547-0003, Japan

S-14229HZ-C1
© 2006 Icom Inc.